FTZ

Innovative Designs
Professional Quality
Customer Satisfaction !

Monoblock Directional Control Valves
Sectional Directional Control Valves

For Mobile and Industrial Hydraulic Applications.
車輛及產業用油壓零件

FTZ

ISO 9001:2008
QA100189

Chapters

Spec 規格 P.02

Ordering code (Inlet) 訂購編號 (入油) P.11

Ordering code (Spool) 訂購編號 (心軸) P.14

Ordering code (A side) 訂購編號 (A邊) P.21

Ordering code (B side) 訂購編號 (B邊) P.23

Ordering code (A/B side) 訂購編號 (A/B邊) P.33

Ordering code (Port option) 訂購編號 (A/B口) P.35

Ordering code (Accessory) 訂購編號 (配件) P.42

Mechanical Rotary Spool Control Type 手動旋轉控制 P.45

Solenoid Operated Sectional Type 電控片式換向閥 P.50

Flexible Cable Remote Controls 纜線遠程控制 P.51

Hydraulic Pilot Operation Controls 液壓引導式控制 P.53

MB-2 Dimensions

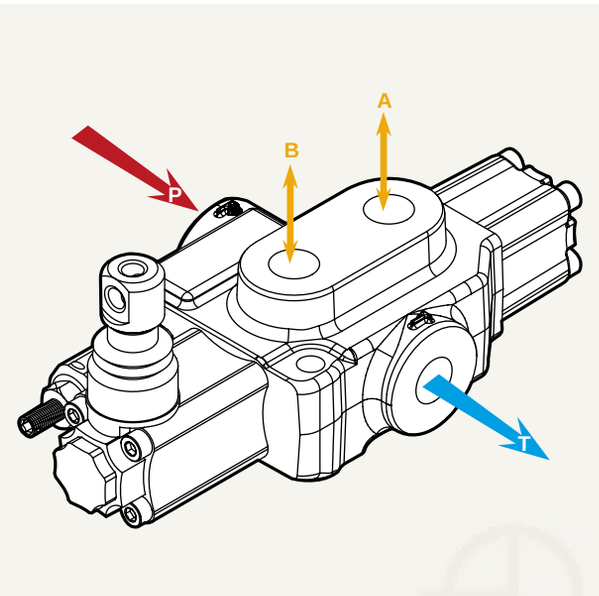

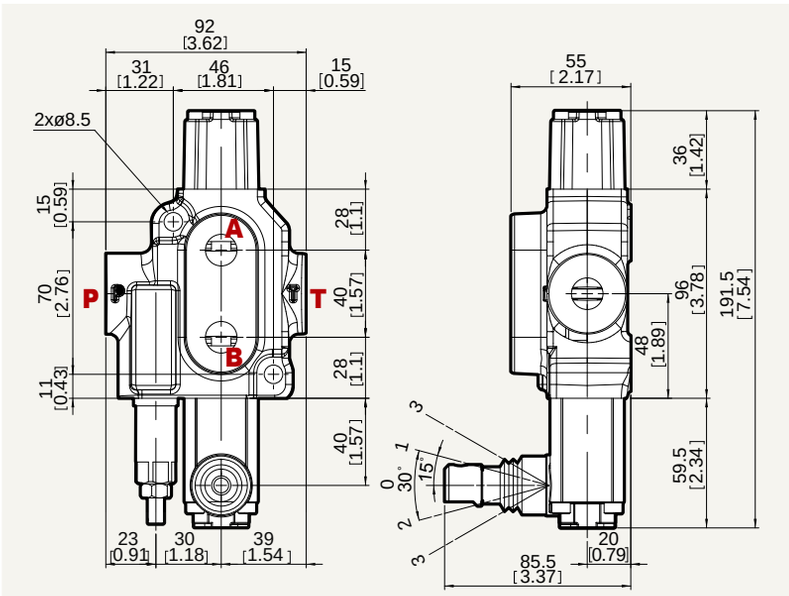

MB-2 Specifications 規 格

Nominal flow 流量		45 l/min	12 US gpm
Operating pressure (maximum) 使用壓力(最大)		250 bar	3600 psi
Back pressure (maximum) 背壓(最大)	on outlet port T 回油口T	25 bar	360 psi
Fluid temperature range 流體溫度範圍	with NBR (BUNA-N) seals O環(NBR)	from - 20° to 80°C	from - 4° to 176° F
	with FPM (VITON) seal O環(FPM)	from - 20° to 100°C	from - 4° to 212° F
Viscosity 黏度係數	operating range 建議使用範圍	from 15 to 75 mm^2/s	from 15 to 75 cst
	min. 最小	12 mm^2/s	12 cst
	max. 最大	400 mm^2/s	400 cst
Ambient temperature range 環境溫度範圍		from - 40° to 60°C	from - 40° to 140° F

• All specifications, dimensions and design characteristics shown in this catalogue are subject to change without notice.

Standard threads 螺紋規範

PORTS	Inlet P 入油口	A and B 工作口	Outlet T and C 回油口
BSP	G3/8	G3/8	G3/8
UN-UNF	3/4-16 UNF-2B (SAE 8)	3/4-16 UNF-2B (SAE 8)	3/4-16 UNF-2B (SAE 8)
METRIC	M18 x 1.5	M18 x 1.5	M18 x 1.5

PILOT PORTS	Hydraulic 油壓引導口	Pneumatic 氣壓引導口
BSP	G1/4	NPTF 1/8-27
UN-UNF	9/16-18 UNF-2B (SAE 6)	NPTF 1/8-27
METRIC	G1/4	NPTF 1/8-27

• G-3/8 : G3 G-1/2 : G4 G-3/4 : G6 G-1 : G8 G-1 1/4 : G10

• SAE 8: E8 SAE 10: E10 SAE 12: E12 SAE 16: E16 SAE 20: E20

MB-3 Dimensions

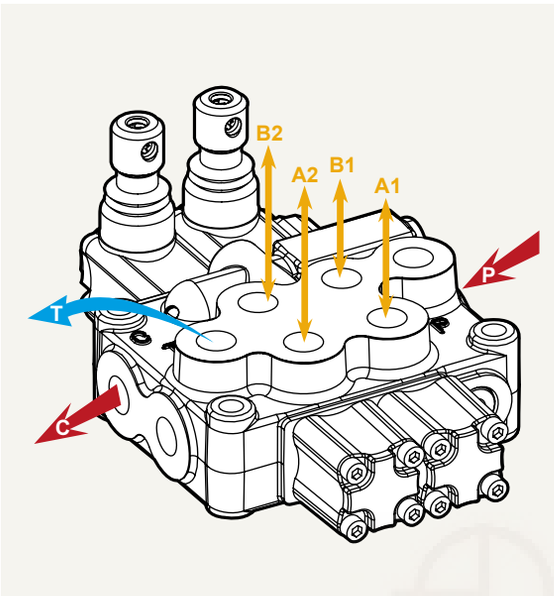

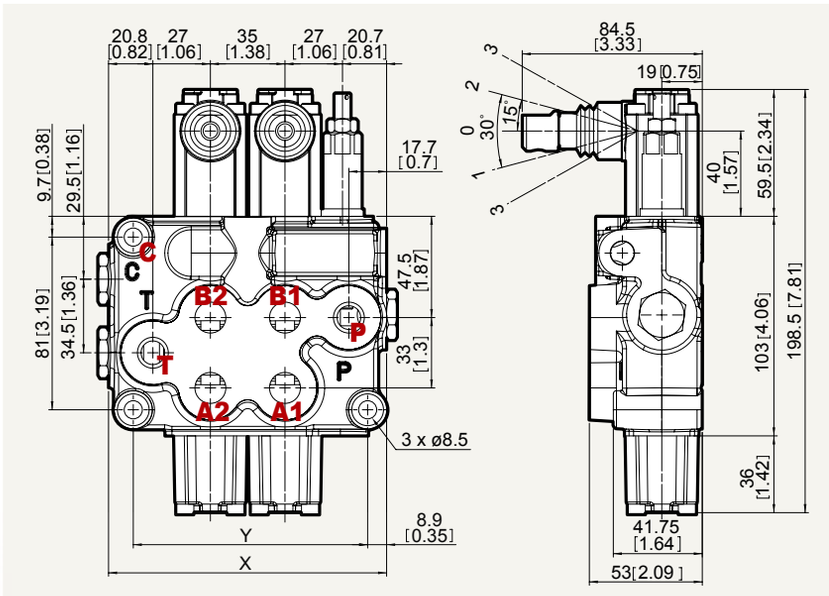

MB-3 Specifications 規 格

Nominal flow 流量		45 l/min	12 US gpm
Operating pressure (maximum) 使用壓力(最大)		315 bar	4600 psi
Back pressure (maximum) 背壓(最大)	on outlet port T 回油口T	25 bar	360 psi
Fluid temperature range 流體溫度範圍	with NBR (BUNA-N) seals O環(NBR)	from - 20° to 80°C	from - 4° to 176° F
	with FPM (VITON) seal O環(FPM)	from - 20° to 100°C	from - 4° to 212° F
Viscosity 黏度係數	operating range 建議使用範圍	from 15 to 75 mm ^{2}/s	from 15 to 75 cst
	min. 最小	12 mm ^{2}/s	12 cst
	max. 最大	400 mm ^{2}/s	400 cst
Ambient temperature range 環境溫度範圍		from - 40° to 60°C	from - 40° to 140° F

• All specifications, dimensions and design characteristics shown in this catalogue are subject to change without notice.

Standard threads 螺紋規範

PORT S	Inlet P 入油口	A and B 工作口	Outlet T and C 回油口
BSP	G3/8	G3/8	G3/8
UN-UNF	3/4-16 UNF-2B (SAE 8)	3/4-16 UNF-2B (SAE 8)	3/4-16 UNF-2B (SAE 8)
METRIC	M18 x 1.5	M18 x 1.5	M18 x 1.5

• G-3/8 : G3 G-1/2 : G4 G-3/4 : G6 G-1 : G8 G-1 1/4 : G10

PILOT PORT S	Hydraulic 油壓引導口	Pneumatic 氣壓引導口
BSP	G1/4	NPTF 1/8-27
UN-UNF	9/16-18 UNF-2B (SAE 6)	NPTF 1/8-27
METRIC	G1/4	NPTF 1/8-27

• SAE 8: E8 SAE 10: E10 SAE 12: E12 SAE 16: E16 SAE 20: E20

Standard dimensions 尺寸

TYPE	X		Y	
	mm	in	mm	in
MB3 /1S	93.5	3.68	73	2.87
MB3 /2S	130.5	5.14	110	4.33
MB3 /3S	165.5	6.52	147	5.79
MB3 /4S	202.5	7.97	184	7.24
MB3 /5S	239.5	9.43	221	8.7
MB3 /6S	276.5	10.89	258	10.16
MB3 /7S	313.5	12.34	295	11.61

MB-4 Dimensions

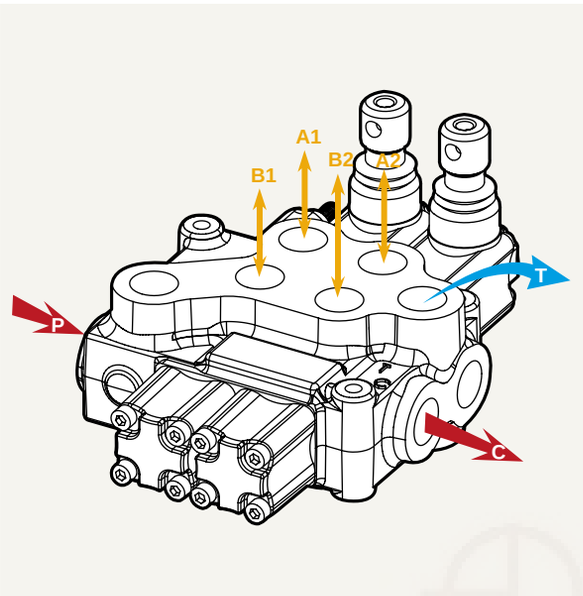

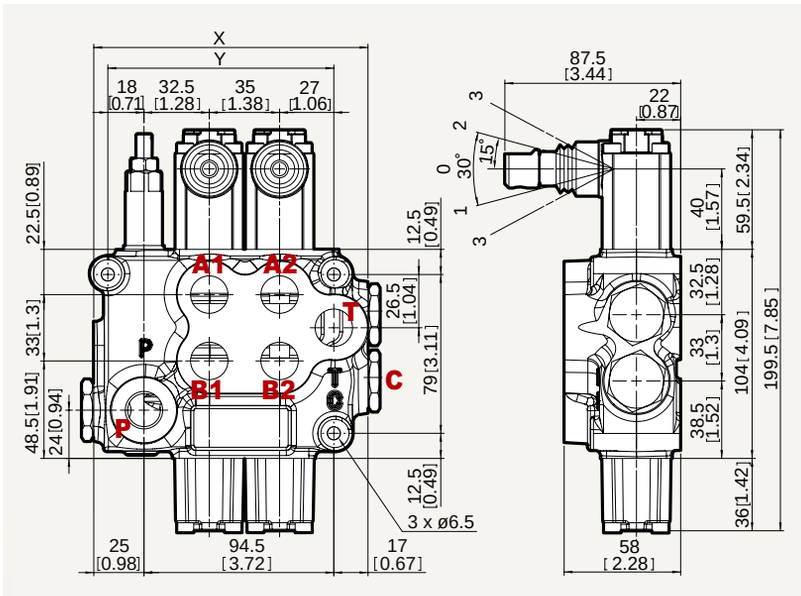

MB-4 Specifications 規 格

Nominal flow 流量		60 l/min	16 US gpm
Operating pressure (maximum) 使用壓力(最大)		315 bar	4600 psi
Back pressure (maximum) 背壓(最大)	on outlet port T 回油口T	25 bar	360 psi
Fluid temperature range 流體溫度範圍	with NBR (BUNA-N) seals O環(NBR)	from - 20° to 80°C	from - 4° to 176° F
	with FPM (VITON) seal O環(FPM)	from - 20° to 100°C	from - 4° to 212° F
Viscosity 黏度係數	operating range 建議使用範圍	from 15 to 75 mm^2/s	from 15 to 75 cst
	min. 最小	12 mm^2/s	12 cst
	max. 最大	400 mm^2/s	400 cst
Ambient temperature range 環境溫度範圍		from - 40° to 60°C	from - 40° to 140° F

• All specifications, dimensions and design characteristics shown in this catalogue are subject to change without notice.

Standard threads 螺紋規範

PORTS	Inlet P 入油口	A and B 工作口	Outlet T and C 回油口
BSP	G1/2	G1/2	G1/2
UN-UNF	3/4-16 UNF-2B (SAE 8)	3/4-16 UNF-2B (SAE 8)	3/4-16 UNF-2B (SAE 8)
METRIC	M18 x 1.5	M18 x 1.5	M18 x 1.5

PILOT PORTS	Hydraulic 油壓引導口	Pneumatic 氣壓引導口
BSP	G1/4	NPTF 1/8-27
UN-UNF	9/16-18 UNF-2B (SAE 6)	NPTF 1/8-27
METRIC	G1/4	NPTF 1/8-27

• G-3/8 : G3 G-1/2 : G4 G-3/4 : G6 G-1 : G8 G-1 1/4 : G10 • SAE 8: E8 SAE 10: E10 SAE 12: E12 SAE 16: E16 SAE 20: E20

Standard dimensions 尺寸

TYPE	X		Y	
	mm	in	mm	in
MB4 /1S	101.5	4	77.5	3.05
MB4 /2S	136.5	5.37	112.5	4.33
MB4 /3S	171.5	6.75	147.5	5.81
MB4 /4S	206.5	8.13	182.5	7.19
MB4 /5S	241.5	9.51	217.5	8.56
MB4 /6S	276.5	10.89	252.5	9.94

MB-5 Dimensions

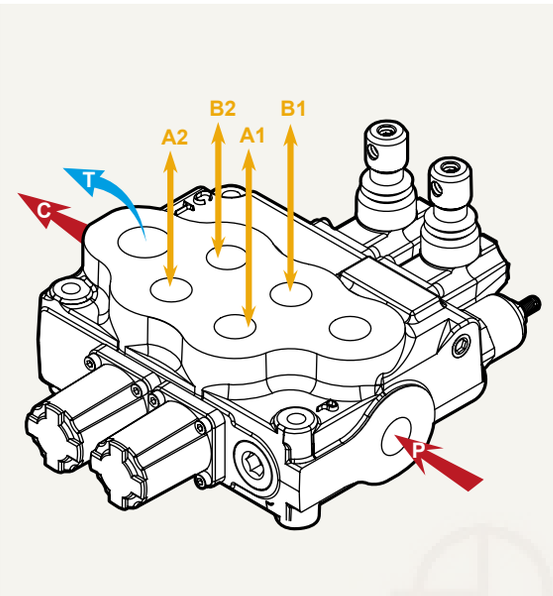

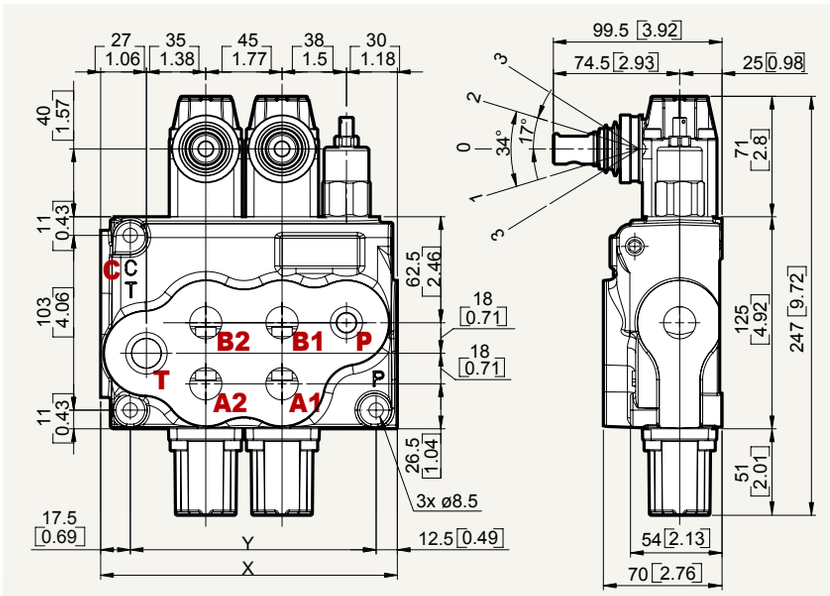

MB-5 Specifications 規 格

Nominal flow 流量		80 l/min	21 US gpm
Operating pressure (maximum) 使用壓力(最大)		315 bar	4600 psi
Back pressure (maximum) 背壓(最大)	on outlet port T 回油口T	25 bar	360 psi
Fluid temperature range 流體溫度範圍	with NBR (BUNA-N) seals O環(NBR)	from - 20° to 80°C	from - 4° to 176° F
	with FPM (VITON) seal O環(FPM)	from - 20° to 100°C	from - 4° to 212° F
Viscosity 黏度係數	operating range 建議使用範圍	from 15 to 75 mm ^{2}/s	from 15 to 75 cst
	min. 最小	12 mm ^{2}/s	12 cst
	max. 最大	400 mm ^{2}/s	400 cst
Ambient temperature range 環境溫度範圍		from - 40° to 60°C	from - 40° to 140° F

• All specifications, dimensions and design characteristics shown in this catalogue are subject to change without notice.

Standard threads 螺紋規範

PORT S	Inlet P 入油口	A and B 工作口	Outlet T and C 回油口
BSP	G1/2	G1/2	G3/4
UN-UNF	1" 1/16-12 UN (SAE 12)	7/8-14 UNF (SAE 10)	1" 1/16-12 UN (SAE 12)
METRIC	M18 x 1.5	M18 x 1.5	M22 x 1.5

• G-3/8 : G3 G-1/2 : G4 G-3/4 : G6 G-1 : G8 G-1 1/4 : G10

PILOT PORT S	Hydraulic 油壓引導口	Pneumatic 氣壓引導口
BSP	G1/4	NPTF 1/8-27
UN-UNF	9/16-18 UNF-2B (SAE 6)	NPTF 1/8-27
METRIC	G1/4	NPTF 1/8-27

• SAE 8: E8 SAE 10: E10 SAE 12: E12 SAE 16: E16 SAE 20: E20

Standard dimensions 尺寸

TYPE	X		Y	
	mm	in	mm	in
MB5 /1S	130	5.12	100	3.94
MB5 /2S	174.5	6.87	145	5.71
MB5 /3S	219.5	8.64	190	7.48
MB5 /4S	264.5	10.41	235	9.25
MB5 /5S	309.5	12.19	280	11.02
MB5 /6S	354.5	13.96	325	12.80

MSB-5 Dimensions

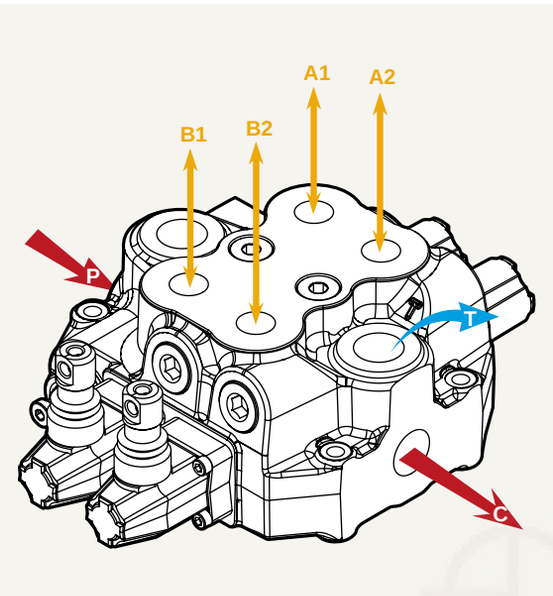

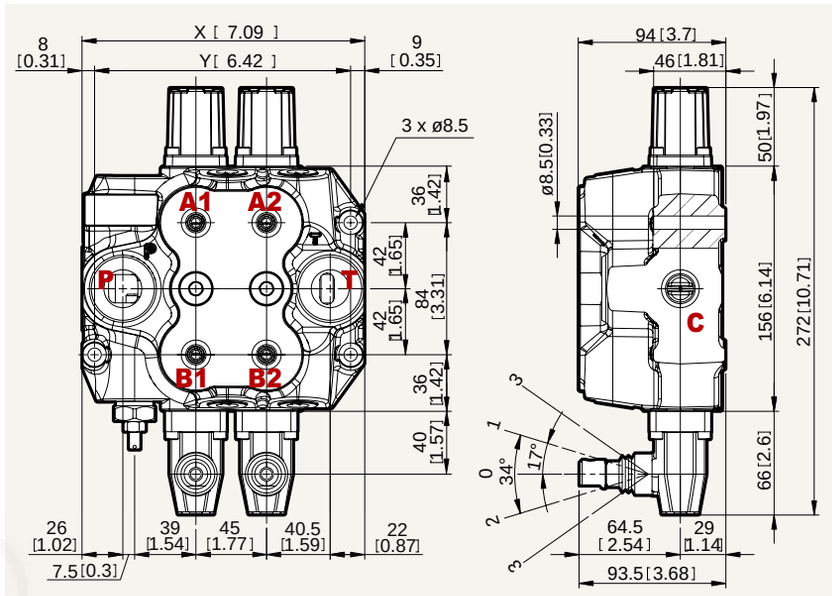

MSB-5 Specifications 規 格

Nominal flow 流量		80 l/min	21 US gpm
Operating pressure (maximum) 使用壓力(最大)		315 bar	4600 psi
Back pressure (maximum) 背壓(最大)	on outlet port T 回油口T	25 bar	360 psi
Fluid temperature range 流體溫度範圍	with NBR (BUNA-N) seals O環(NBR)	from - 20° to 80°C	from - 4° to 176° F
	with FPM (VITON) seal O環(FPM)	from - 20° to 100°C	from - 4° to 212° F
Viscosity 黏度係數	operating range 建議使用範圍	from 15 to 75 mm^2/s	from 15 to 75 cst
	min. 最小	12 mm^2/s	12 cst
	max. 最大	400 mm^2/s	400 cst
Ambient temperature range 環境溫度範圍		from - 40° to 60°C	from - 40° to 140° F

• All specifications, dimensions and design characteristics shown in this catalogue are subject to change without notice.

Standard threads 螺紋規範

PORTS	Inlet P 入油口	A and B 工作口	Outlet T and C 回油口
BSP	G3/4	G1/2	G3/4
UN-UNF	1" 1/16-12 UN (SAE 12)	7/8-14 UNF (SAE 10)	1" 1/16-12 UN (SAE 12)
METRIC	M27 x 2	M22 x 1.5	M27 x 2

PILOT PORTS	Hydraulic 油壓引導口	Pneumatic 氣壓引導口
BSP	G1/4	NPTF 1/8-27
UN-UNF	9/16-18 UNF-2B (SAE 6)	NPTF 1/8-27
METRIC	G1/4	NPTF 1/8-27

• G-3/8 : G3 G-1/2 : G4 G-3/4 : G6 G-1 : G8 G-1 1/4 : G10 • SAE 8: E8 SAE 10: E10 SAE 12: E12 SAE 16: E16 SAE 20: E20

Standard dimensions 尺寸

TYPE	X		Y	
	mm	in	mm	in
MSB5 /1S	135	5.32	118	4.65
MSB5 /2S	180	7.09	163	6.42
MSB5 /3S	225	8.86	208	8.19
MSB5 /4S	270	10.63	253	9.96
MSB5 /5S	315	12.40	298	11.73
MSB5 /6S	360	14.17	343	13.50

SN-3 Dimensions

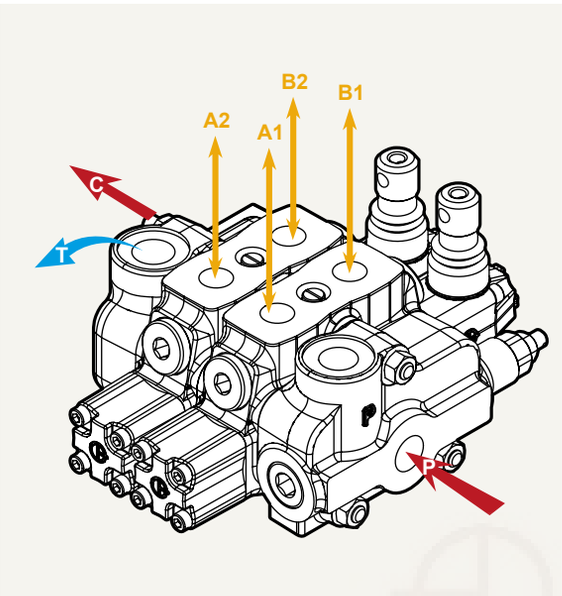

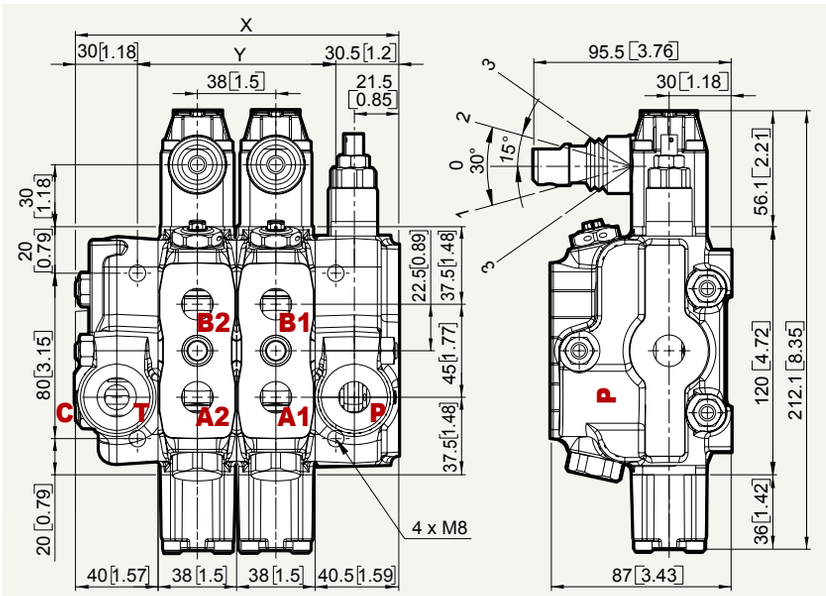

SN-3 Specifications 規 格

Nominal flow 流量		50 l/min	13 US gpm
Operating pressure (maximum) 使用壓力(最大)		315 bar	4600 psi
Back pressure (maximum) 背壓(最大)	on outlet port T 回油口T	25 bar	360 psi
Fluid temperature range 流體溫度範圍	with NBR (BUNA-N) seals O環(NBR)	from - 20° to 80°C	from - 4° to 176° F
	with FPM (VITON) seal O環(FPM)	from - 20° to 100°C	from - 4° to 212° F
Viscosity 黏度係數	operating range 建議使用範圍	from 15 to 75 mm ^{2}/s	from 15 to 75 cst
	min. 最小	12 mm ^{2}/s	12 cst
	max. 最大	400 mm ^{2}/s	400 cst
Ambient temperature range 環境溫度範圍		from - 40° to 60°C	from - 40° to 140° F

• All specifications, dimensions and design characteristics shown in this catalogue are subject to change without notice.

Standard threads 螺紋規範

PORT S	Inlet P 入油口	A and B 工作口	Outlet T and C 回油口
BSP	G 3/8	G 3/8	G 1/2
UN-UNF	7/8-14 (SAE 10)	3/4-16 (SAE 8)	7/8-14 (SAE 10)
METRIC	M18 x 1.5	M18 x 1.5	M22 x 1.5

• G-3/8 : G3 G-1/2 : G4 G-3/4 : G6 G-1 : G8 G-1 1/4 : G10

PILOT PORT S	Hydraulic 油壓引導口	Pneumatic 氣壓引導口
BSP	G1/4	NPTF 1/8-27
UN-UNF	9/16-18 UNF-2B (SAE 6)	NPTF 1/8-27
METRIC	G1/4	NPTF 1/8-27

• SAE 8: E8 SAE 10: E10 SAE 12: E12 SAE 16: E16 SAE 20: E20

Standard dimensions 尺寸

TYPE	X		Y	
	mm	in	mm	in
SN3 /1S	118.5	4.66	58	2.28
SN3 /2S	156.5	6.16	96	3.78
SN3 /3S	194.5	7.66	134	5.28
SN3 /4S	232.5	9.15	172	6.77
SN3 /5S	270.5	10.65	210	8.27
SN3 /6S	308.5	12.15	248	9.76

TYPE	X		Y	
	mm	in	mm	in
SN3 /7S	346.5	13.65	286	11.26
SN3 /8S	384.5	15.15	324	12.76
SN3 /9S	422.5	16.65	362	14.26
SN3 /10S	460.5	18.15	400	15.76
SN3 /11S	498.5	19.65	438	17.26
SN3 /12S	536.5	21.15	476	18.76

SN-4 Dimensions

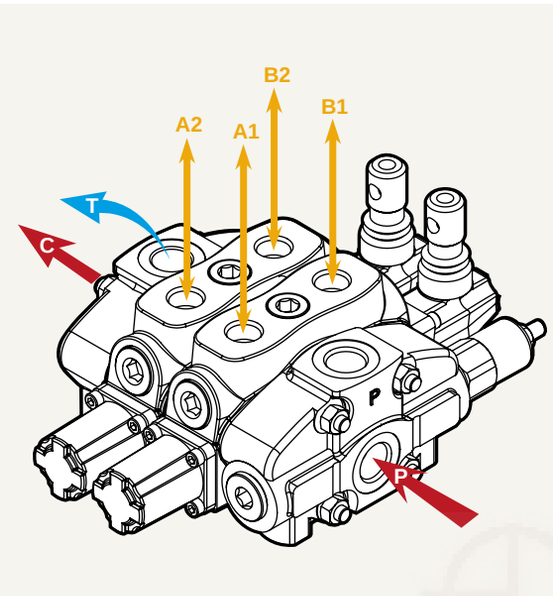

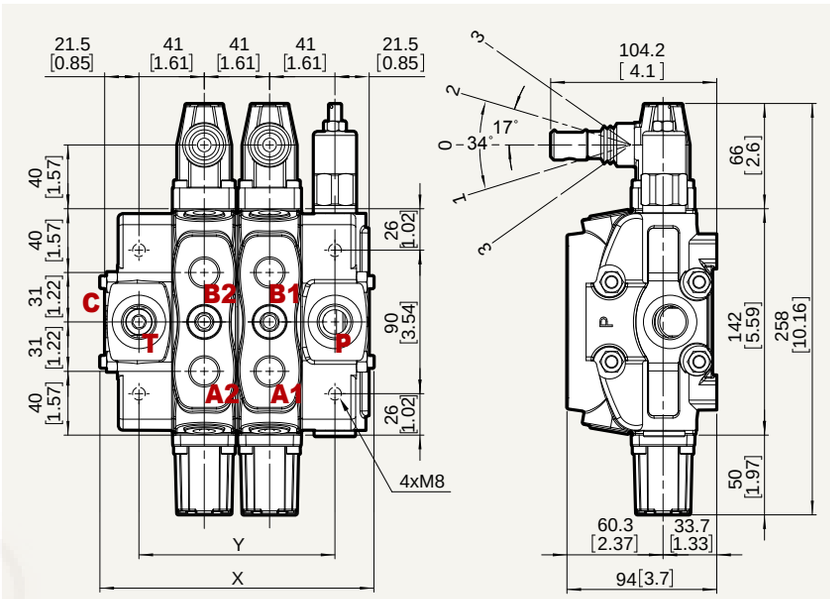

SN-4 Specifications 規 格

Nominal flow 流量		80 l/min	21 US gpm
Operating pressure (maximum) 使用壓力(最大)		315 bar	4600 psi
Back pressure (maximum) 背壓(最大)	on outlet port T 回油口T	25 bar	360 psi
Fluid temperature range 流體溫度範圍	with NBR (BUNA-N) seals O環(NBR)	from - 20° to 80°C	from - 4° to 176° F
	with FPM (VITON) seal O環(FPM)	from - 20° to 100°C	from - 4° to 212° F
Viscosity 黏度係數	operating range 建議使用範圍	from 15 to 75 mm^2/s	from 15 to 75 cst
	min 最小	12 mm^2/s	12 cst
	max. 最大	400 mm^2/s	400 cst
Ambient temperature range 環境溫度範圍		from - 40° to 60°C	from - 40° to 140° F

• All specifications, dimensions and design characteristics shown in this catalogue are subject to change without notice.

Standard threads 螺紋規範

PORTS	Inlet P and carry-over C 入油口	A and B 工作口	Outlet T 回油口
BSP	G1/2	G1/2	G3/4
UN-UNF	7/8-14 UNF-2B (SAE 10)	3/4-16 UNF-2B (SAE 8)	7/8-14 UNF-2B (SAE 10)
METRIC	M22 x 1.5	M22 x 1.5	M22 x 1.5

PILOT PORTS	Hydraulic 油壓引導口	Pneumatic 氣壓引導口
BSP	G1/4	NPTF 1/8-27
UN-UNF	9/16-18 UNF-2B (SAE 6)	NPTF 1/8-27
METRIC	G1/4	NPTF 1/8-27

• G-3/8 : G3 G-1/2 : G4 G-3/4 : G6 G-1 : G8 G-1 1/4 : G10 • SAE 8: E8 SAE 10: E10 SAE 12: E12 SAE 16: E16 SAE 20: E20

Standard dimensions 尺寸

TYPE	X		Y	
	mm	in	mm	in
SN4 /1S	128	5.04	82	3.23
SN4 /2S	169	6.65	123	4.84
SN4 /3S	210	8.27	164	6.46
SN4 /4S	251	9.88	205	8.07
SN4 /5S	292	11.5	246	9.69
SN4 /6S	333	13.11	267	11.3

TYPE	X		Y	
	mm	in	mm	in
SN4 /7S	374	14.72	328	12.91
SN4 /8S	415	16.33	369	14.52
SN4 /9S	456	17.94	410	16.13
SN4 /10S	497	19.55	451	17.74
SN4 /11S	538	21.16	492	19.35
SN4 /12S	579	22.77	533	20.96

SN-6 Dimensions

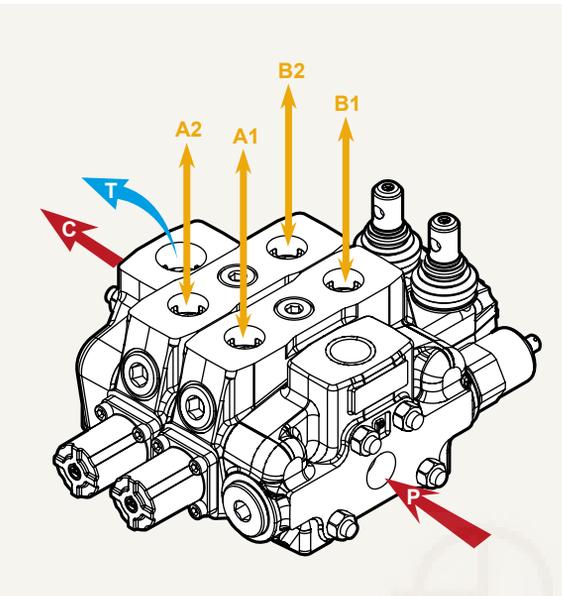

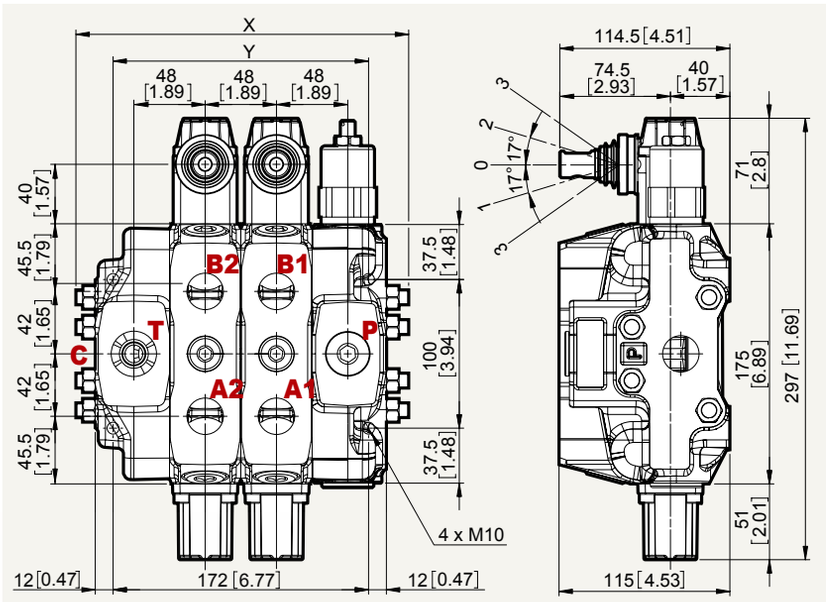

SN-6 Specifications 規 格

Nominal flow 流量		160 l/min	42 US gpm
Operating pressure (maximum) 使用壓力(最大)		315 bar	4600 psi
Back pressure (maximum) 背壓(最大)	on outlet port T 回油口T	25 bar	360 psi
Fluid temperature range 流體溫度範圍	with NBR (BUNA-N) seals O環(NBR)	from - 20° to 80°C	from - 4° to 176° F
	with FPM (VITON) seal O環(FPM)	from - 20° to 100°C	from - 4° to 212° F
Viscosity 黏度係數	operating range 建議使用範圍	from 15 to 75 mm ^{2}/s	from 15 to 75 cst
	min. 最小	12 mm ^{2}/s	12 cst
	max. 最大	400 mm ^{2}/s	400 cst
Ambient temperature range 環境溫度範圍		from - 40° to 60°C	from - 40° to 140° F

• All specifications, dimensions and design characteristics shown in this catalogue are subject to change without notice.

Standard threads 螺紋規範

PORT S	Inlet P and carry-over C 入油口	A and B 工作口	Outlet T 回油口
BSP	G3/4	G3/4	G1
UN-UNF	1 5/16-12 UN-2B (SAE 16)	1 1/16-12 UN-2B (SAE 12)	1 5/16-12 UN-2B (SAE 16)

• G-3/8 : G3 G-1/2 : G4 G-3/4 : G6 G-1 : G8 G-1 1/4 : G10

PILOT PORT S	Hydraulic 油壓引導口	Pneumatic 氣壓引導口
BSP	G1/4	NPTF 1/8-27
UN-UNF	9/16-18 UNF-2B (SAE 6)	NPTF 1/8-27

• SAE 8: E8 SAE 10: E10 SAE 12: E12 SAE 16: E16 SAE 20: E20

Standard dimensions 尺寸

TYPE	X		Y	
	mm	in	mm	in
SN6 /1S	176	6.63	124	4.88
SN6 /2S	224	8.82	172	6.77
SN6 /3S	272	10.71	220	8.66
SN6 /4S	320	12.60	268	10.55
SN6 /5S	368	14.49	316	12.44
SN6 /6S	416	16.38	364	14.33

TYPE	X		Y	
	mm	in	mm	in
SN6 /7S	464	18.27	412	16.22
SN6 /8S	512	20.16	460	18.11
SN6 /9S	560	22.05	508	20
SN6 /10S	608	23.94	556	21.89
SN6 /11S	656	25.83	604	23.78
SN6 /12S	704	27.72	652	25.67

SN-8 Dimensions

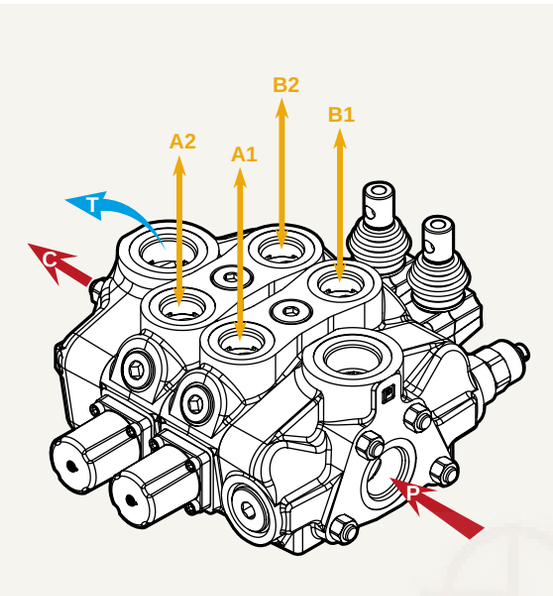

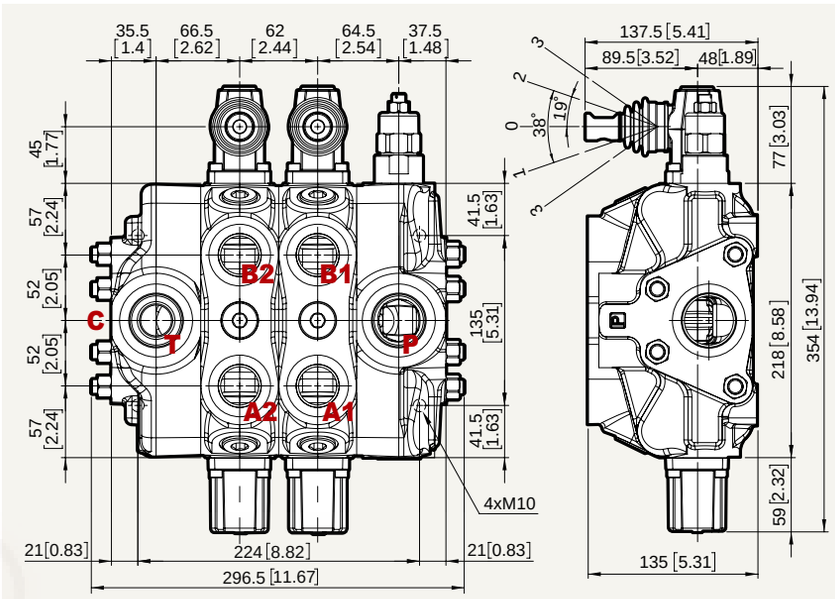

SN-8 Specifications 規 格

Nominal flow 流量		240 l/min	63 US gpm
Operating pressure (maximum) 使用壓力(最大)		315 bar	4600 psi
Back pressure (maximum) 背壓(最大)	on outlet port T 回油口T	25 bar	360 psi
Fluid temperature range 流體溫度範圍	with NBR seals O環(NBR)	from - 20° to 80°C	from - 4° to 176° F
	with FPM seal O環(FPM)	from - 20° to 100°C	from - 4° to 212° F
Viscosity 黏度係數	operating range 建議使用範圍	from 15 to 75 mm^2/s	from 15 to 75 cst
	min. 最小	12 mm^2/s	12 cst
	max. 最大	400 mm^2/s	400 cst
Ambient temperature range 環境溫度範圍		from - 40° to 60°C	from - 40° to 140° F

• All specifications, dimensions and design characteristics shown in this catalogue are subject to change without notice.

Standard threads 螺紋規範

PORTS	Inlet P 入油口	A and B 工作口	Outlet T and C 回油口
BSP	G1	G1	G1-1/4
UN-UNF	1-5/8-12 (SAE 20)	1-5/16-12 (SAE 16)	1-5/8-12 (SAE 20)

• **G-3/8 : G3 G-1/2 : G4 G-3/4 : G6 G-1 : G8 G-1 1/4 : G10**

PILOT PORTS	Hydraulic 油壓引導口	Pneumatic 氣壓引導口
BSP	G1/4	NPTF 1/8-27
UN-UNF	9/16-18 UNF-2B (SAE 6)	NPTF 1/8-27

• **SAE 8: E8 SAE 10: E10 SAE 12: E12 SAE 16: E16 SAE 20: E20**

Standard dimensions 尺寸

TYPE	X		Y	
	mm	in	mm	in
SN8 /1S	235	9.25	162	6.38
SN8 /2S	297	11.69	224	8.28
SN8 /3S	359	14.13	286	11.26
SN8 /4S	421	16.57	348	13.70
SN8 /5S	483	19.02	410	16.14
SN8 /6S	545	21.46	472	18.58

TYPE	X		Y	
	mm	in	mm	in
SN8 /7S	607	23.90	534	21.02
SN8 /8S	669	26.34	596	23.46
SN8 /9S	731	28.78	658	25.90
SN8 /10S	793	31.22	720	28.34
SN8 /11S	855	33.66	782	30.78
SN8 /12S	917	36.10	844	33.22

Inlet Relief (Optional)
溢流閥(選購)

Direct pressure relief valve #2		Product	Code
直動式溢流閥		MB2	YLMB32002
		MB3	YLMB32002
		MB4	YLMB42002
		MB5	YLMB52002
		MSB3	YLMSB32002
		MSB5	YLMSB52002
		SN3	YLPSN33002
		SN4	YLPSN43002
		SN6	YLPSN63002
		SN8	

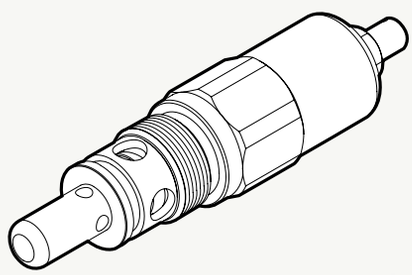

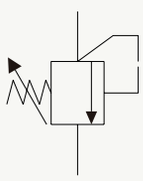

Direct pressure relief valve #3		Product	Code
直動式溢流閥		MB2	YLMB32003
		MB3	YLMB32003
		MB4	YLMB42003
		MB5	YLMB52003
		MSB3	YLMSB32003
		MSB5	YLMSB52003
		SN3	YLPSN33003
		SN4	YLPSN43003
		SN6	YLPSN63003
		SN8	

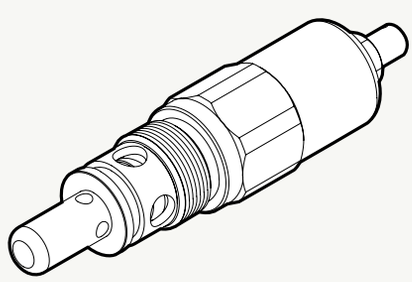

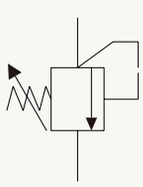

Inlet Relief (Optional)
溢流閥(選購)

Direct pressure relief valve #4		Product	Code
直動式溢流閥		MB2	YLMB32004
		MB3	YLMB32004
		MB4	YLMB42004
		MB5	YLMB52004
		MSB3	YLMSB32004
		MSB5	YLMSB52004
		SN3	YLPSN33004
		SN4	YLPSN43004
		SN6	
		SN8	

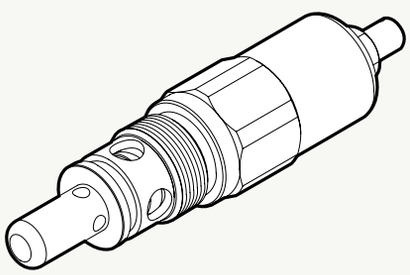

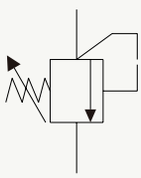

Pilot operated pressure relief valve		Product	Code
引導式溢流閥		MB2	YLMB32001
		MB3	YLMB32001
		MB4	YLMB42001
		MB5	YLX21000
		MSB3	YLMSB32001
		MSB5	YLMSB52001
		SN3	YLPSN33000
		SN4	YLX21000
		SN6	YLPSN63000
		SN8	YLPSN83000

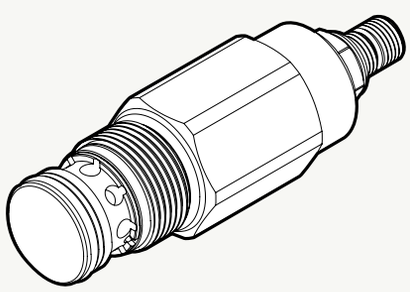

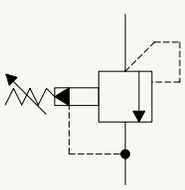

Inlet Relief (Optional)
溢流閥(選購)

R elief valve blanking plug		Product	Code
塞 頭 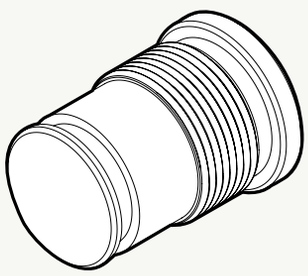		MB2	YLMB32100
		MB3	YLMB32100
		MB4	YLMB42100
		MB5	YLMB52100
		MSB3	YLMSB32100
		MSB5	YLMSB52100
		SN3	YLPSN34000
		SN4	YLPSN44000
		SN6	YLPSN64000
		SN8	YLPSN84000

Spool options
心軸 (選購)

Type 1		Product	Code
P → A B → T C Closed	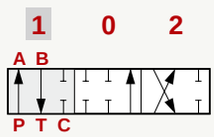	MB2	YLMB23001
		MB3	YLMB33001
		MB4	YLMB43001
		MB5	YLMB53001
		MSB3	YLMSB33001
A & B & P & T closed C open	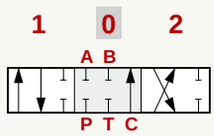	MSB5	YLMSB53001
		SN3	YLWSN32001
		SN4	YLWSN42001
		SN6	YLWSN62001
		SN8	YLWSN82001
P → B A → T C closed	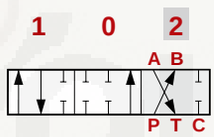	MB3 8ES3#1	YLMB33001-8ES3
		MB4 8ES3#1	YLMB43001-8ES3
		MB3 8ESN#1	YLMB33001-8ESN
		MB4 8ESN#1	YLMB43001-8ESN
		SN3 8ESN#1	YLWSN32001-8ESN

Type 2		Product	Code
P → A B → T C closed	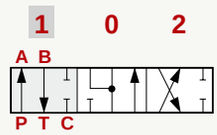	MB2	YLMB23002
		MB3	YLMB33002
		MB4	YLMB43002
		MB5	YLMB53002
		MSB3	YLMSB33002
A & B → T P closed C open	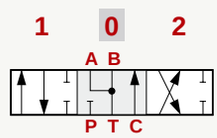	MSB5	YLMSB53002
		SN3	YLWSN32002
		SN4	YLWSM42002
		SN6	YLWSN62002
		SN8	YLWSN82002
P → B A → T C closed	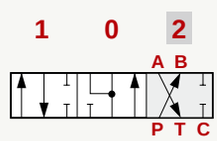	MB3 8ES3#2	YLMB33002-8ES3
		MB4 8ES3#2	YLMB43002-8ES3
		MB3 8ESN#2	YLMB33002-8ESN
		MB4 8ESN#2	YLMB43002-8ESN
		SN3 8ESN#2	YLWSN32002-8ESN

標準心軸的中立位置
Standard spool neutral position.

MB-4 心軸的中立位置，AB 口改為對調表示。
Standard spool neutral position for MB-4 only.

Spool options
心軸(選購)

Type 3		Product	Code
P → A C & T closed	1 0 2 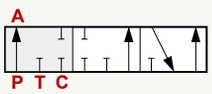 "B" port plugged	MB2	YLMB23003
		MB3	YLMB33003
		MB4	YLMB43003
		MB5	YLMB53003
P & A & T closed C open	1 0 2 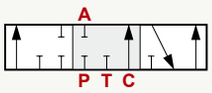 "B" port plugged	MSB3	YLMSB33003
		MSB5	YLMSB53003
		SN3	YLWSN32003
		SN4	YLWSN42003
A → T P closed C open	1 0 2 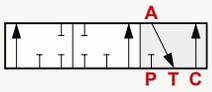 "B" port plugged	SN6	YLWSN62003
		SN8	YLWSN82003

Type 4		Product	Code
B → T P closed C open	1 0 2 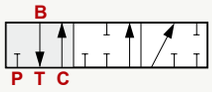 "A" port plugged	MB2	YLMB23004
		MB3	YLMB33004
		MB4	YLMB43004
		MB5	YLMB53004
P & B & T closed C open	1 0 2 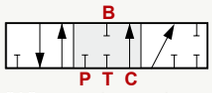 "A" port plugged	MSB3	YLMSB33004
		MSB5	YLMSB53004
		SN3	YLWSN32004
		SN4	YLWSN42004
P → B C closed	1 0 2 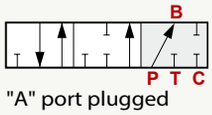 "A" port plugged	SN6	YLWSN62004
		SN8	YLWSN82004

標準心軸的中立位置
Standard spool neutral position .

MB-4 心軸的中立位置，AB 口改為對調表示。
Standard spool neutral position for MB-4 only .

Spool options
心軸 (選購)

Type 5		Product	Code
P → A B → T C closed	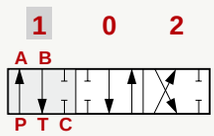	MB2	YLMB23005
		MB3	YLMB33005
		MB4	YLMB43005
		MB5	YLMB53005
B → T A & P closed C open	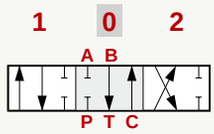	MSB3	YLMSB33005
		MSB5	YLMSB53005
		SN3	YLWSN32005
		SN4	YLWSN42005
P → B A → T C closed	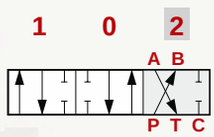	SN6	YLWSN62005
		SN8	YLWSN82005

Type 6		Product	Code
P → A B → T C closed	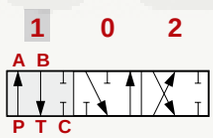	MB2	YLMB23006
		MB3	YLMB33006
		MB4	YLMB43006
		MB5	YLMB53006
A T P & B closed C open	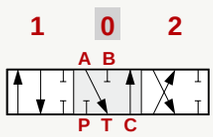	MSB3	YLMSB33006
		MSB5	YLMSB53006
		SN3	YLWSN32006
		SN4	YLWSN42006
P → B A → T C closed	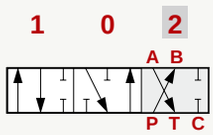	SN6	YLWSN62006
		SN8	YLWSN82006

標準心軸的中立位置
Standard spool neutral position.

MB-4 心軸的中立位置，AB 口改為對調表示。
Standard spool neutral position for MB-4 only.

Spool options
心軸(選購)

Type 7		Product	Code
P → A C & T closed	1 0 2 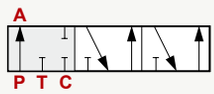 "B" port plugged	MB2	YLMB23007
		MB3	YLMB33007
		MB4	YLMB43007
		MB5	YLMB53007
A → T P closed C open	1 0 2 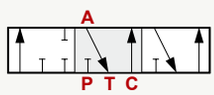 "B" port plugged	MSB3	YLMSB33007
		MSB5	YLMSB53007
		SN3	YLWSN32007
		SN4	YLWSN42007
A → T P closed C open	1 0 2 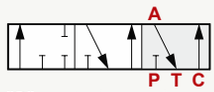 "B" port plugged	SN6	YLWSN62007
		SN8	YLWSN82007

Type 8		Product	Code
P → B C & P closed	1 0 2 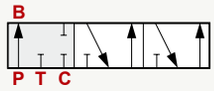 "A" port plugged	MB2	YLMB23008
		MB3	YLMB33008
		MB4	YLMB43008
		MB5	YLMB53008
B → T P closed C open	1 0 2 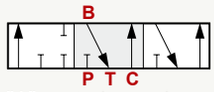 "A" port plugged	MSB3	YLMSB33008
		MSB5	YLMSB53008
		SN3	YLWSN32008
		SN4	YLWSN42008
B → T P closed C open	1 0 2 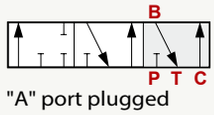 "A" port plugged	SN6	YLWSN62008
		SN8	YLWSN82008

標準心軸的中立位置
Standard spool neutral position .

MB-4 心軸的中立位置，AB 口改為對調表示。
Standard spool neutral position for MB-4 only .

Spool options
心軸 (選購)

Type 9		Product	Code
P → A B → T C closed	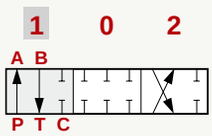	MB2	YLMB23009
		MB3	YLMB33009
		MB4	YLMB43009
		MB5	YLMB53009
A & B & P & T closed C closed	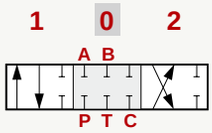	MSB3	YLMSB33009
		MSB5	YLMSB53009
		SN3	YLWSN32009
		SN4	YLWSN42009
P → B A → T C closed	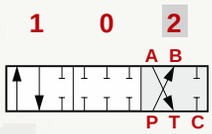	SN6	YLWSN62009
		SN8	YLWSN82009

Type 10		Product	Code
P → A B → T C closed	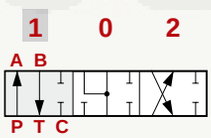	MB2	YLMB23010
		MB3	YLMB33010
		MB4	YLMB43010
		MB5	YLMB53010
A & B → T P & C closed	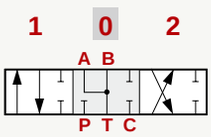	MSB3	YLMSB33010
		MSB5	YLMSB53010
		SN3	YLWSN32010
		SN4	YLWSN42010
P → B A → T C closed	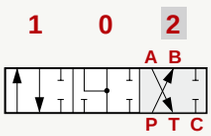	SN6	YLWSN62010
		SN8	YLWSN82010

標準心軸的中立位置
Standard spool neutral position.

MB-4 心軸的中立位置，AB 口改為對調表示。
Standard spool neutral position for MB-4 only.

Spool options
心軸(選購)

Type 5DY		Product	Code
P → A B → T C closed	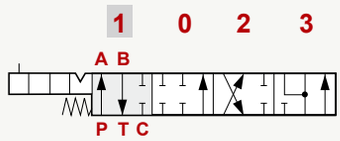	MB2	
		MB3	YLMB33052
		MB4	YLMB43052
P & A & B & T closed C open	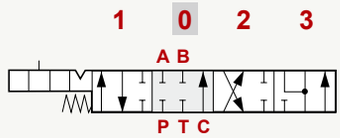	MB5	YLMB53052
		MSB3	YLMSB33052
		MSB5	YLMSB53052
P → B A → T C closed	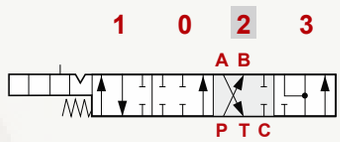	SN3	YLWSN32052
		SN4	YLWSN42052
		SN6	YLWSN62052
A & B → T P closed C open	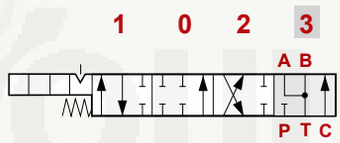	SN8	YLWSN82052

Type 5PY		Product	Code
A & B → T P closed C open	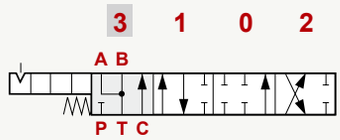	MB2	
		MB3	YLMB33051
		MB4	YLMB43051
P → A B → T C closed	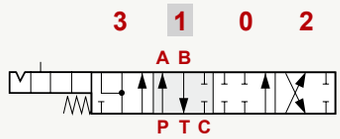	MB5	YLMB53051
		MSB3	YLMSB33051
		MSB5	YLMSB53051
P & A & B & T closed C open	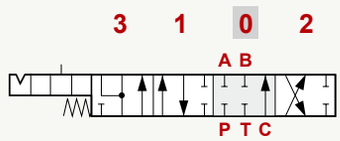	SN3	YLWSN32051
		SN4	YLWSN42051
		SN6	YLWSN62051
P → B A → T C closed	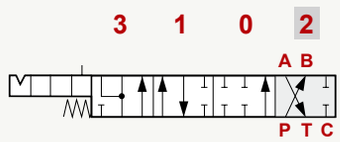	SN8	YLWSN82051

標準心軸的中立位置
Standard spool neutral position .

MB-4 心軸的中立位置，AB 口改為對調表示。
Standard spool neutral position for MB-4 only .

Spool options
心軸 (選購)

Type Z41		Product	Code
P → A B → T C closed	1 0 2 3 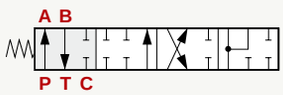 Rest in pos. 1	MB2	
		MB3	YLMB33041
		MB4	YLMB43041
P & A & B & T closed C open	1 0 2 3 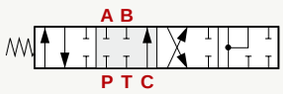 	MB5	
		MSB3	
		MSB5	
P → B A → T C closed	1 0 2 3 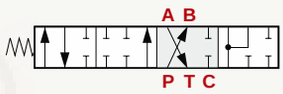 	SN3	
		SN4	
		SN6	
P → A & B T & C closed	1 0 2 3 	SN8	

Type Z42		Product	Code
P → A B → T C closed	1 0 2 3 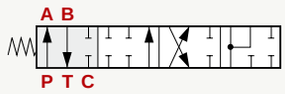 	MB2	
		MB3	YLMB33042
		MB4	YLMB43042
P & A & B & T closed C open	1 0 2 3 Rest in pos. 0	MB5	
		MSB3	
		MSB5	
P → B A → T C closed	1 0 2 3 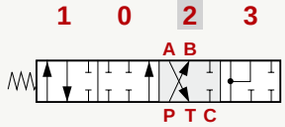 	SN3	
		SN4	
		SN6	
P → A & B T & C closed	1 0 2 3 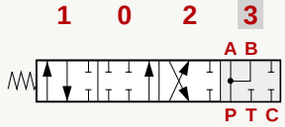 	SN8	

標準心軸的中立位置
Standard spool neutral position.

MB-4 心軸的中立位置，AB 口改為對調表示。
Standard spool neutral position for MB-4 only.

A Side
A 邊(選購)

Type L		Product	Code
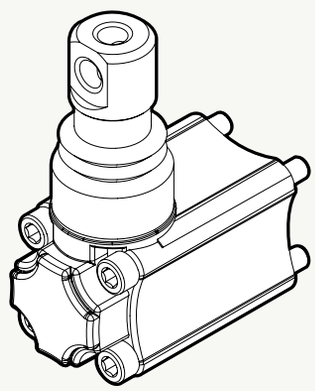	1 0 2 STANDARD LEVER KIT 標準手柄控制配件	MB2	YLMB45000
		MB3	YLMB45000
		MB4	YLMB45000
		MB5	YLMB55000
		MSB3	YLMSB35000
		MSB5	YLWSN44000
		SN3	YLWSN34000
		SN4	YLWSN44000
		SN6	YLWSN64000
		SN8	YLWSN84000

Type S LP		Product	Code
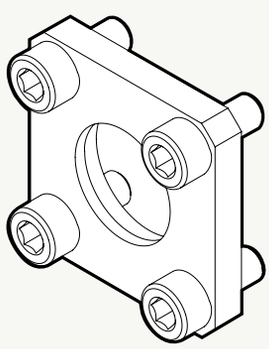	1 0 2 Without lever, With DUST PROOF PLATE 防塵蓋控制配件	MB2	YLMB35001
		MB3	YLMB35001
		MB4	YLMB45001
		MB5	YLMB55001
		MSB3	YLMSB35001
		MSB5	YLWSN44001
		SN3	YLWSN34003
		SN4	YLWSN44001
		SN6	YLWSN64001
		SN8	YLWSN84001

A Side
A 邊(選購)

Type TQ		Product	Code
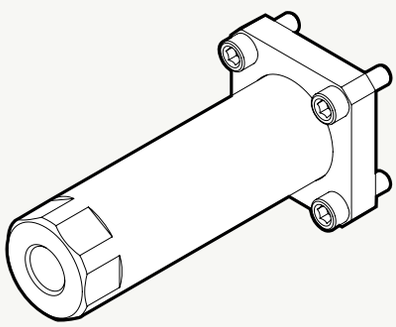	1 0 2 CABLE CONTROL 纜線控制配件	MB2	YLMB45003
		MB3	YLMB45003
		MB4	YLMB45003
		MB5	YLMB55003
		MSB3	YLMSB35003
		MSB5	YLWSN44003
		SN3	YLWSN34004
		SN4	YLWSN44003
		SN6	YLWSN64003
		SN8	YLWSN84003

Type LCB		Product	Code
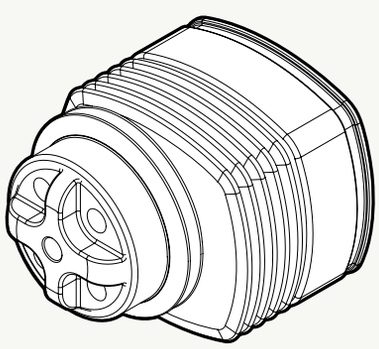	1 0 2 1 0 2 MECHANICAL JOYSTICK 手柄控制配件(兩軸)	MB2	
		MB3	YLMB45002
		MB4	YLMB45002
		MB5	YLMB55002
		MSB3	YLMSB35002
		MSB5	YLWSN45002
		SN3	YLWSN34002
		SN4	YLWSN44002
		SN6	YLWSN64002
		SN8	YLWSN84002

B Side
B 邊(選購)

Type 6-1		Product	Code
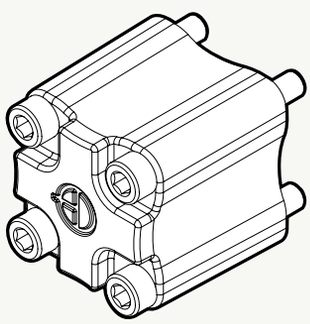	 6-1 Kit: Detent in pos. 1-0-2, Without spring CENTERE D 定位 0 & 1 & 2，不帶彈簧覆位	MB2	YLMB24061
		MB3	YLMB44061
		MB4	YLMB44061
		MB5	YLMB54061
		MSB3	YLMSB34061
		MSB5	YLWSN43061
		SN3	YLWSN33061
		SN4	YLWSN43061
		SN6	YLWSN63061
		SN8	YLWSN83061

Type 6-2		Product	Code
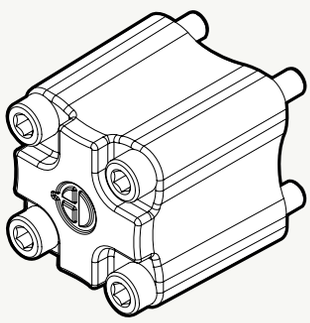	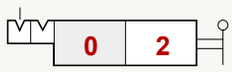 6-2 Kit: 2 positions, Detent in pos. 0-2, Without SPRING CENTERE D 定位 0 & 2，不帶彈簧覆位	MB2	YLMB24062
		MB3	YLMB44062
		MB4	YLMB44062
		MB5	YLMB54062
		MSB3	YLMSB34062
		MSB5	YLWSN43062
		SN3	YLWSN33062
		SN4	YLWSN43062
		SN6	YLWSN63062
		SN8	YLWSN83062

B Side
B 邊(選購)

Type 6-3

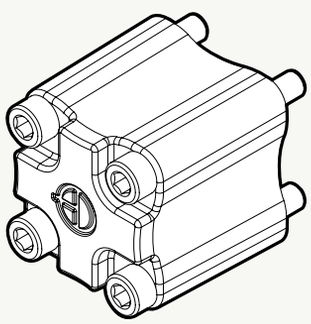

6-3 Kit:

2 POSITIONS, DETENT IN POS. 1-0, WITHOUT SPRING CENTERED

定位 0 & 1，不帶彈簧覆位

Product	Code
MB2	YLMB24063
MB3	YLMB44063
MB4	YLMB44063
MB5	YLMB54063
MSB3	YLMSB34063
MSB5	YLWSN43063
SN3	YLWSN33063
SN4	YLWSN43063
SN6	YLWSN63063
SN8	YLWSN83063

Type 8D2

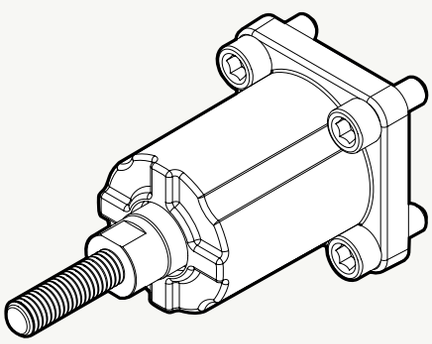

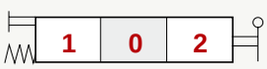

8D2 Kit:

WITH SPRING RETURN TO NEUTRAL POSITION AND PIN WITH M8 MALE THREAD FOR DUAL CONTROL

彈簧覆位，帶轉接螺紋

Product	Code
MB2	YLMB24200
MB3	YLMB44200
MB4	YLMB44200
MB5	YLMB54082
MSB3	YLMSB34082
MSB5	YLWSN43082
SN3	YLWSN33082
SN4	YLWSN43082
SN6	YLWSN63082
SN8	YLWSN83082

B Side
B 邊(選購)

Type 8P		Product	Code
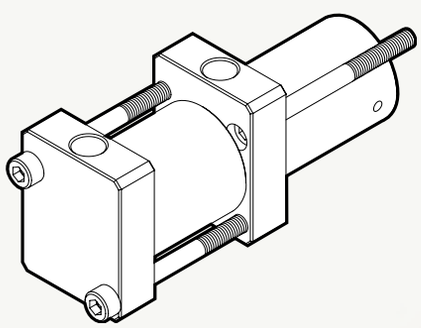	V1 & V2 : NP T 1/8 - 27 ON/OFF P NEUMATIC ACTUATOR ON / OFF 氣動控制	MB2	YLMB24080
		MB3	YLMB44080
		MB4	YLMB44080
		MB5	YLMB54080
		MSB3	YLMSB34080
		MSB5	YLWSN43080
		SN3	YLWSN33080
		SN4	YLWSN43080
		SN6	YLWSN63080
		SN8	YLWSN83080

Type 8EP3		Product	Code
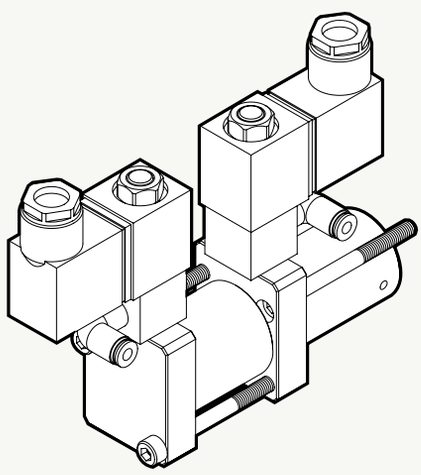	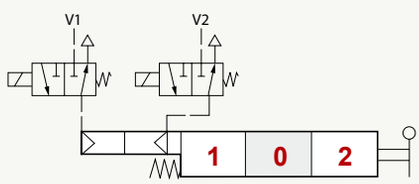 ON/OFF ELECTRO -PNEUMATIC ACTUATOR ON / OFF 電氣動控制	MB2	YLMB24300
		MB3	YLMB44300
		MB4	YLMB44300
		MB5	YLMB54300
		MSB3	YLMSB34300
		MSB5	YLWSN44300
		SN3	YLWSN34300
		SN4	YLWSN44300
		SN6	YLWSN64300
		SN8	YLWSN84300

B Side
B 邊(選購)

Type 8ED3

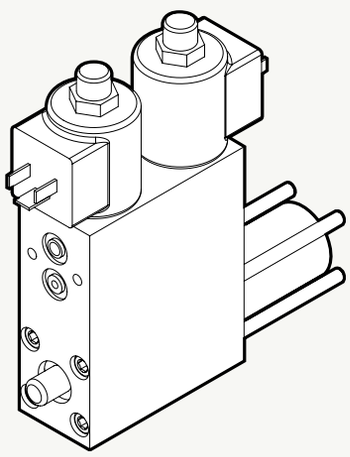

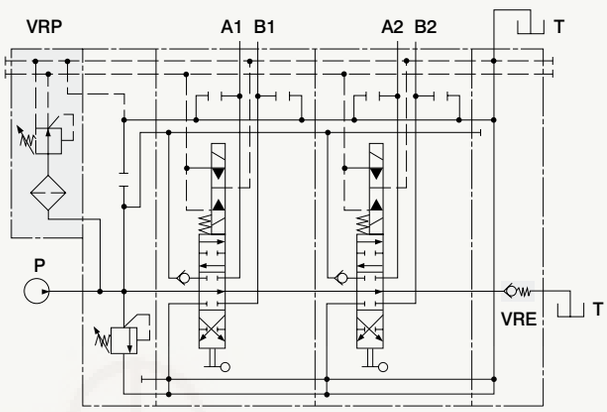

ON/OFF ELECTRO-HYDRAULIC CONTROL KIT WITH PILOT AND DRAIN LINE+BACKPRESSURE VALVE (12/24 VDC)

ON / OFF 電液控制

Product	Code
MB2	
MB3	YLMB44201～44206
MB4	YLMB44201～44206
MB5	YLMB54201～54206
MSB3	YLMSB34201～34206
MSB5	YLMSB54201～54206
SN3	YLWSN34201～34212
SN4	YLWSN43201～43212
SN6	YLWSN63201～63212
SN8	YLWSN83201～83212

Type 8ER3

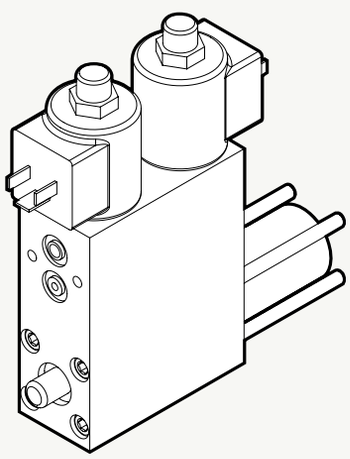

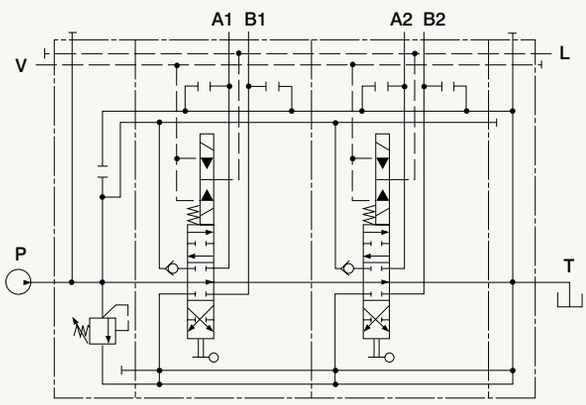

ON/OFF ELECTRO-HYDRAULIC CONTROL KIT WITH COLLECTOR KIT FOR EXTERNAL PILOT AND DRAIN

ON / OFF 電液控制，需外接引導壓與回油

Product	Code
MB2	
MB3	YLMB44401～44406
MB4	YLMB44401～44406
MB5	YLMB54401～54406
MSB3	YLMSB34401～34406
MSB5	YLMSB54401～54406
SN3	YLWSN33401～33412
SN4	YLWSN43401～43412
SN6	YLWSN63401～63412
SN8	YLWSN83401～83412

B Side
B 邊(選購)

Type 8MG-1 (NC)		Product	Code
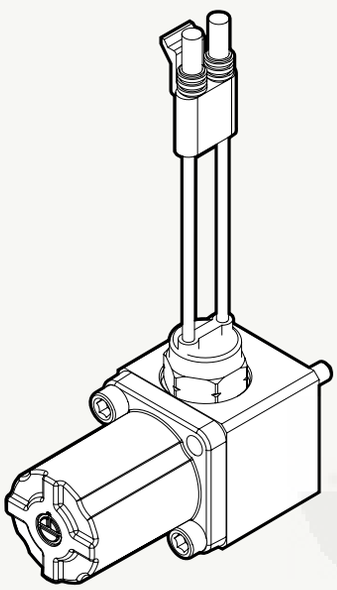	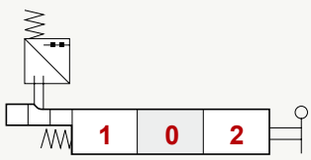 8MG-1 Kit: MICROSWITC H WITH MALE/FEMA LE connector, oper Ate D in pos .1 微動開關(常閉), 作用位置 1	MB2	YLMB248011
		MB3	YLMB448011
		MB4	YLMB448011
		MB5	YLMB548011
		MSB3	YLMSB348011
		MSB5	YLWSN438011
		SN3	YLWSN348011
		SN4	YLWSN438011
		SN6	YLWSN638011
		SN8	YLWSN838011

Type 8MG-2 (NC)		Product	Code
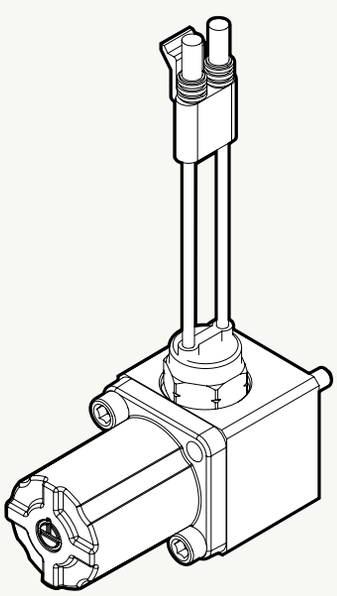	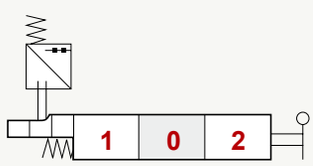 8MG-2 Kit: MICROSWITC H WITH MALE/FEMA LE connector, oper Ate D in pos .2 微動開關(常閉), 作用位置 2	MB2	YLMB248021
		MB3	YLMB448021
		MB4	YLMB448021
		MB5	YLMB548021
		MSB3	YLMSB348021
		MSB5	YLWSN438021
		SN3	YLWSN348021
		SN4	YLWSN438021
		SN6	YLWSN638021
		SN8	YLWSN838021

B Side
B 邊(選購)

Type 8MG-3 (NC)

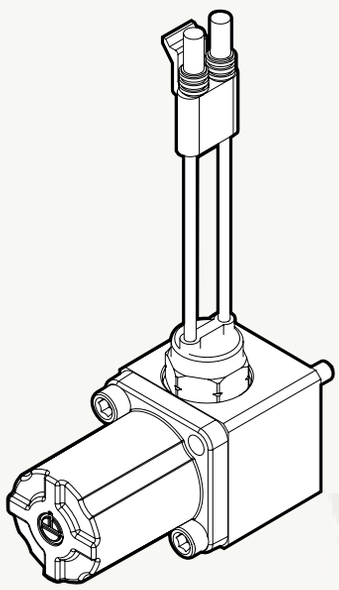

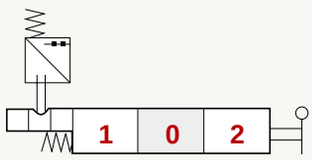

8MG-3 Kit:

MICROSWITCH WITH MALE/FEMALE CONNECTOR, OPERATED IN POS. 1 AND POS. 2

微動開關(常閉)，作用位置 1 & 2

Product	Code
MB2	YLMB248031
MB3	YLMB448031
MB4	YLMB448031
MB5	YLMB548031
MSB3	YLMSB348031
MSB5	YLWSN438031
SN3	YLWSN348031
SN4	YLWSN438031
SN6	YLWSN638031
SN8	YLWSN838031

Type 8MG-1 (NO)

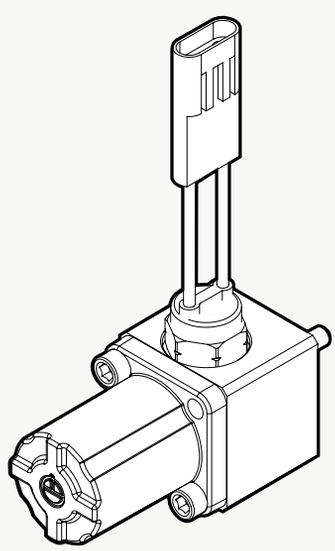

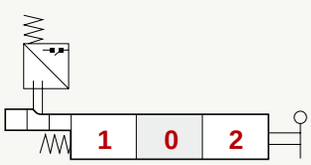

8MG-1 Kit:

MICROSWITCH WITH MALE/FEMALE CONNECTOR, OPERATED IN POS. 1

微動開關(常開)，作用位置 1

Product	Code
MB2	YLMB24801
MB3	YLMB44801
MB4	YLMB44801
MB5	YLMB54801
MSB3	YLMSB34801
MSB5	YLWSN43801
SN3	YLWSN34801
SN4	YLWSN43801
SN6	YLWSN63801
SN8	YLWSN83801

B Side
B 邊(選購)

Type 8MG-2 (N O)		Product	Code
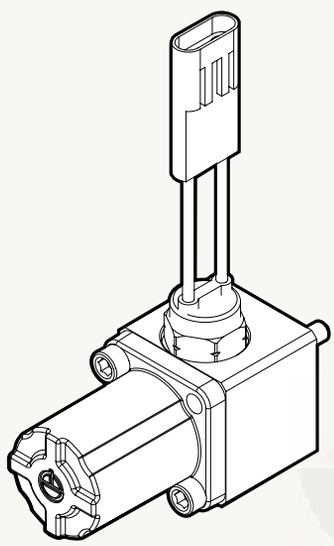	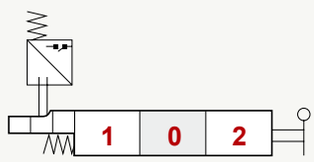 8MG-2 Kit: MICROSWITC H WIT H MALE /FEMA LE connector, oper Ate D in pos . 2 微動開關(常開), 作用位置 2	MB2	YLMB24802
		MB3	YLMB44802
		MB4	YLMB44802
		MB5	YLMB54802
		MSB3	YLMSB34802
		MSB5	YLWSN43802
		SN3	YLWSN34802
		SN4	YLWSN43802
		SN6	YLWSN63802
		SN8	YLWSN83802

Type 8MG-3 (N O)		Product	Code
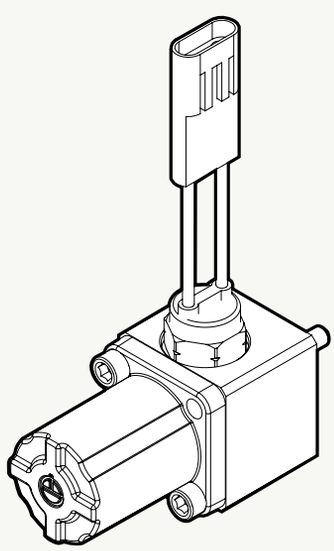	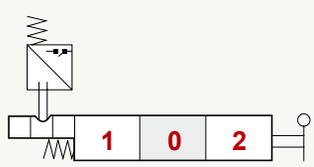 8MG- 3 Kit: MICROSWITC H WIT H MALE /FEMA LE connector, oper Ate D in pos . 1 An D pos . 2 微動開關(常開), 作用位置 1 & 2	MB2	YLMB24803
		MB3	YLMB44803
		MB4	YLMB44803
		MB5	YLMB54803
		MSB3	YLMSB34803
		MSB5	YLWSN43803
		SN3	YLWSN34803
		SN4	YLWSN43803
		SN6	YLWSN63803
		SN8	YLWSN83803

B Side
B 邊(選購)

Type 8		Product	Code
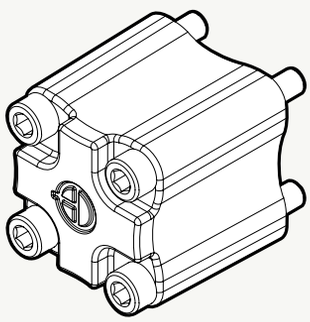	 **8 Kit:** SPRING RETURN TO NEUTRAL POSITION. 彈簧覆位	MB2	YLMB24008
		MB3	YLMB44008
		MB4	YLMB44008
		MB5	YLMB54008
		MSB3	YLMSB34008
		MSB5	YLWSN43008
		SN3	YLWSN33008
		SN4	YLWSN43008
		SN6	YLWSN63008
		SN8	YLWSN83008

Type 8-1		Product	Code
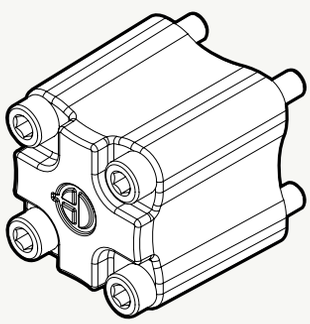	 **8-1 Kit:** SPRING RETURN TO NEUTRAL POSITION. 彈簧覆位，0 & 1 兩位置切換	MB2	YLMB24081
		MB3	YLMB44081
		MB4	YLMB44081
		MB5	YLMB54810
		MSB3	YLMSB34081
		MSB5	YLWSN44801
		SN3	YLWSN34081
		SN4	YLWSN44801
		SN6	YLWSN64081
		SN8	YLWSN84081

B Side
B 邊(選購)

Type 8-2		Product	Code
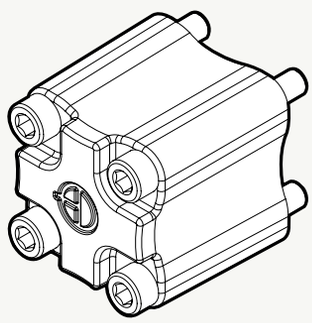	 8-2 Kit: SPRING RETURN TO NEUTRAL POSITION. (2 POSITIONS) 彈簧覆位，0 & 2 兩位置切換	MB2	YLMB24082
		MB3	YLMB44082
		MB4	YLMB44082
		MB5	YLMB54820
		MSB3	YLMSB34082
		MSB5	YLWSN44082
		SN3	YLWSN34082
		SN4	YLWSN44082
		SN6	YLWSN64082
		SN8	YLWSN84082

Type 9-1		Product	Code
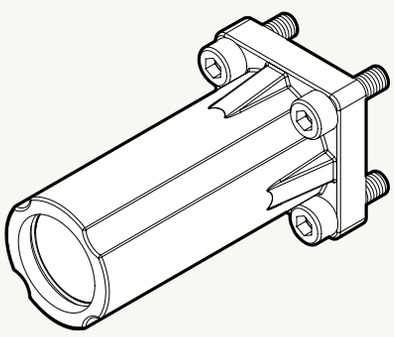	 9-1 Kit: Detent in pos. 1, 2 With spring centere D 定位 0 & 1 & 2，帶彈簧覆位	MB2	YLMB24091
		MB3	YLMB44091
		MB4	YLMB44091
		MB5	YLMB54091
		MSB3	YLMSB34091
		MSB5	YLWSN43091
		SN3	YLWSN33091
		SN4	YLWSN43091
		SN6	YLWSN63091
		SN8	YLWSN83091

B Side
B 邊(選購)

Type 9-2		Product	Code
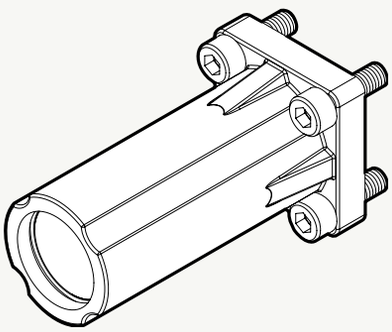	 **9-2 Kit:** DETENT IN POS. 2 WITH SPRING CENTERED 定位2，帶彈簧覆位	MB2	YLMB24092
		MB3	YLMB44092
		MB4	YLMB44092
		MB5	YLMB54092
		MSB3	YLMSB34092
		MSB5	YLWSN43092
		SN3	YLWSN33092
		SN4	YLWSN43092
		SN6	YLWSN63092
		SN8	YLWSN83092

Type 9-3		Product	Code
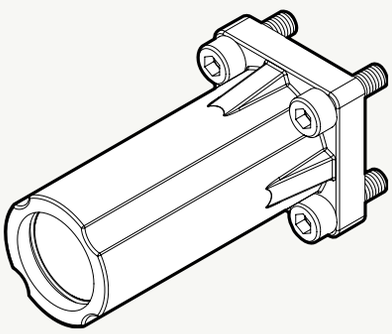	 **9-3 Kit:** DETENT IN POS. 1 WITH SPRING CENTERED 定位1，帶彈簧覆位	MB2	YLMB24093
		MB3	YLMB44093
		MB4	YLMB44093
		MB5	YLMB54093
		MSB3	YLMSB34093
		MSB5	YLWSN43093
		SN3	YLWSN33093
		SN4	YLWSN43093
		SN6	YLWSN63093
		SN8	YLWSN83093

A/B Side
A/B 邊(選購)

Type 8IM		Product	Code
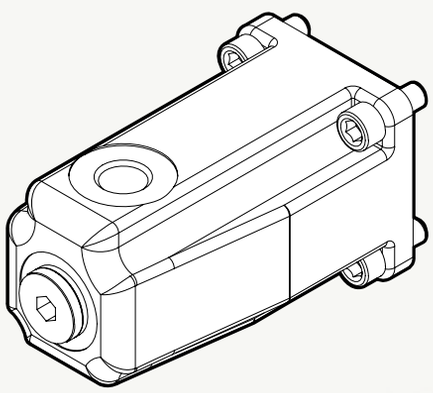	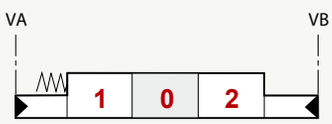 HYDRAULIC PILOT KIT 液壓引導控制配件	MB2	
		MB3	YLMB440810
		MB4	YLMB440810
		MB5	YLMB540810
		MSB3	YLMSB340810
		MSB5	YLWSN430810
		SN3	YLWSN330810
		SN4	YLWSN430810
		SN6	YLWSN630810
		SN8	YLWSN830810

Type 8ESN		Product	Code
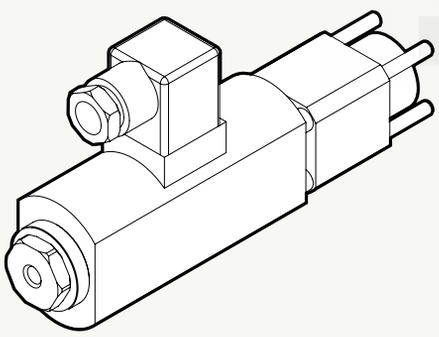	 8ESN LES Kit: ON/OFF ELECTRO-HYDRAULIC CONTROL WITH LEVER ON / OFF 電動控制，帶控制手柄	MB3	YLMB8ESN12D YLMB8ESN24D
		MB4	YLMB8ESN12D YLMB8ESN24D
		SN3	YLWSN38ESN12 YLWSN38ESN24

8ESN+Spools 控制配件+ 心軸	Product	Code
MB3	18ESN LES-12V	YLMB34611
MB3	28ESN LES-12V	YLMB34621
MB3	18ESN LES-24V	YLMB34612
MB3	28ESN LES-24V	YLMB44622

8ESN+Spools 控制配件+ 心軸	Product	Code
MB4	18ESN LES-12V	YLMB44611
MB4	28ESN LES-12V	YLMB44621
MB4	18ESN LES-24V	YLMB44612
MB4	28ESN LES-24V	YLMB44622

8ESN+Spools 控制配件+ 心軸	Product	Code
SN3	18ESN LES-12V	YLWSN33311
SN3	28ESN LES-12V	YLWSN33321
SN3	18ESN LES-24V	YLWSN33312
SN3	28ESN LES-24V	YLWSN33322

A/B Side
A/B 邊(選購)

Type 8ES3		Product	Code
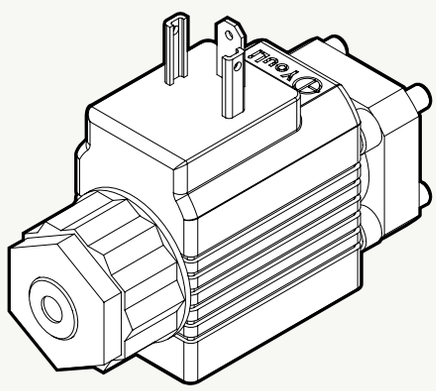	 **8ES-3 Kit:** ACTING IN 1 & 2 ON/OFF ELECTRO-HYDRAULIC CONTROL ON / OFF 電動控制	MB3	YLMB8ES12D YLMB8ES24D
		MB4	YLMB8ES12D YLMB8ES24D

8ES3+Spools (W/O LES) 控制配件+心軸	Product	Code
MB3	18ES3-12V	YLMB34511
MB3	28ES3-12V	YLMB34521
MB3	18ES3-24V	YLMB34512
MB3	28ES3-24V	YLMB34522

8ES3+Spools 控制配件+心軸 (帶操作手把)	Product	Code
MB3	18ES3 LES-12V	YLMB34511L
MB3	28ES3 LES-12V	YLMB34521L
MB3	18ES3 LES-24V	YLMB34512L
MB3	28ES3 LES-24V	YLMB34522L

8ES3+Spools (W/O LES) 控制配件+心軸	Product	Code
MB4	18ES3-12V	YLMB44511
MB4	28ES3-12V	YLMB44521
MB4	18ES3-24V	YLMB44512
MB4	28ES3-24V	YLMB44522

8ES3+Spools 控制配件+心軸 (帶操作手把)	Product	Code
MB4	18ES3 LES-12V	YLMB44511L
MB4	28ES3 LES-12V	YLMB44521L
MB4	18ES3 LES-24V	YLMB44512L
MB4	28ES3 LES-24V	YLMB44522L

Port Relief
A/B 口(選購)

Type C		Product	Code
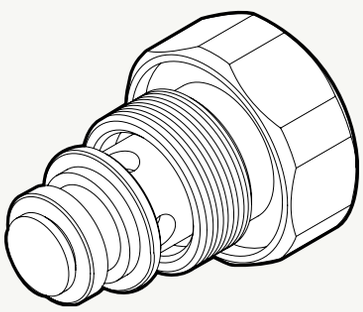	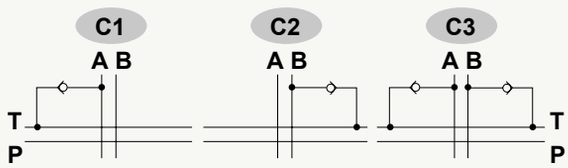 ANTI-CAVITATION VALVE 補油閥	MB2	
		MB3	
		MB4	
		MB5	
		MSB3	YLMSB35100
		MSB5	YLWSN45100
		SN3	YLWSN35100
		SN4	YLWSN45100
		SN6	YLWSN65100
		SN8	YLWSN65100

Type P #2	P (G2-63)	Product	Code
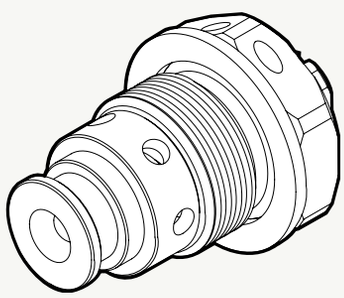	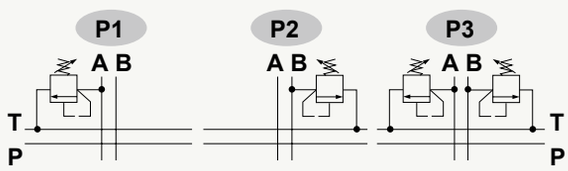 ANTI-SHOCK VALVE 溢流閥	MB2	
		MB3	
		MB4	
		MB5	
		MSB3	YLMSB35002
		MSB5	YLWSN45002
		SN3	YLWSN35002
		SN4	YLWSN45002
		SN6	YLWSN65002
		SN8	YLWSN65002

Port Relief
A/B 口(選購)

Type P #3	P (G3-100)	Product	Code
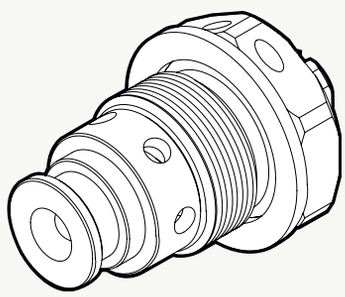	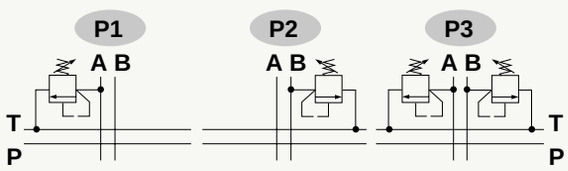 ANTI-SHOCK VALVE 溢流閥	MB2	
		MB3	
		MB4	
		MB5	
		MSB3	YLMSB35003
		MSB5	YLWSN45003
		SN3	YLWSN35003
		SN4	YLWSN45003
		SN6	YLWSN65003
		SN8	YLWSN65003

Type P #4	P (G4-200)	Product	Code
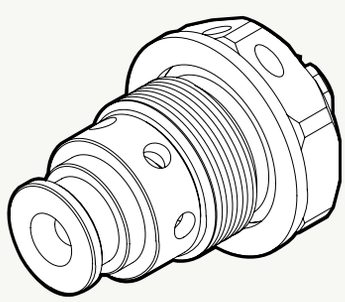	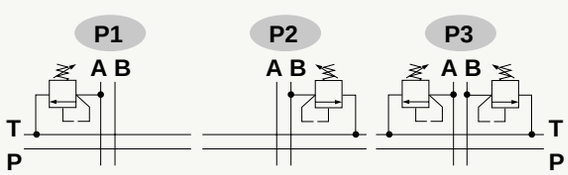 ANTI-SHOCK VALVE 溢流閥	MB2	
		MB3	
		MB4	
		MB5	
		MSB3	YLMSB35004
		MSB5	YLWSN45004
		SN3	YLWSN35004
		SN4	YLWSN45004
		SN6	YLWSN65004
		SN8	YLWSN65004

Port Relief
A/B 口(選購)

Type U #2	U (G2-63)	Product	Code
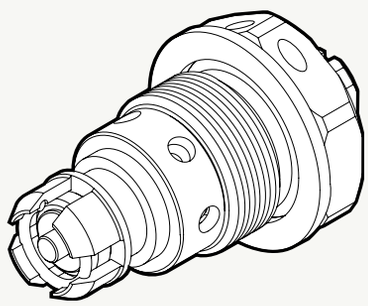	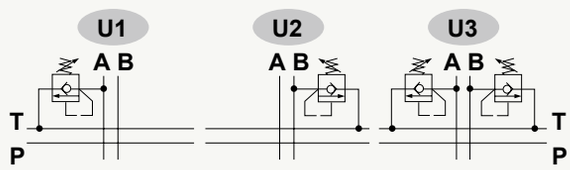 ANTI-SHOCK VALVE AND ANTI-CAVITATION VALVE 緩衝閥	MB2	
		MB3	
		MB4	
		MB5	
		MSB3	YLMSB35012
		MSB5	YLWSN45012
		SN3	YLWSN35012
		SN4	YLWSN45012
		SN6	YLWSN65012
		SN8	YLWSN85012

Type U #3	U (G3-100)	Product	Code
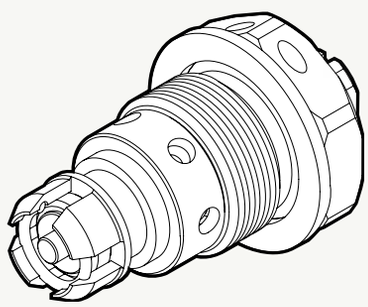	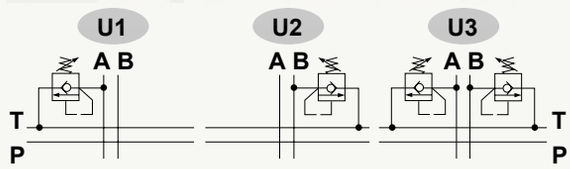 ANTI-SHOCK VALVE AND ANTI-CAVITATION VALVE 緩衝閥	MB2	
		MB3	
		MB4	
		MB5	
		MSB3	YLMSB35013
		MSB5	YLWSN45013
		SN3	YLWSN35013
		SN4	YLWSN45013
		SN6	YLWSN65013
		SN8	YLWSN85013

Type U #4	U (G4-200)	Product	Code
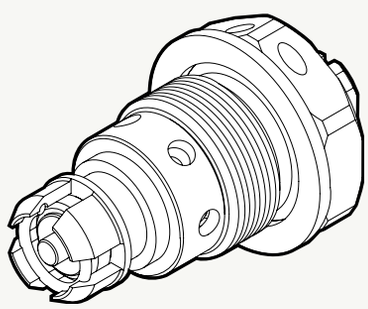	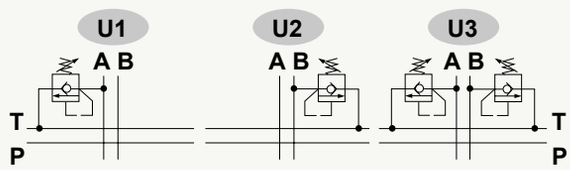 ANTI-SHOCK VALVE AND ANTI-CAVITATION VALVE 緩衝閥	MB2	
		MB3	
		MB4	
		MB5	
		MSB3	YLMSB35014
		MSB5	YLWSN45014
		SN3	YLWSN35014
		SN4	YLWSN45014
		SN6	YLWSN65014
		SN8	YLWSN85014

Port Relief
A/B 口(選購)

Type XU		Product	Code
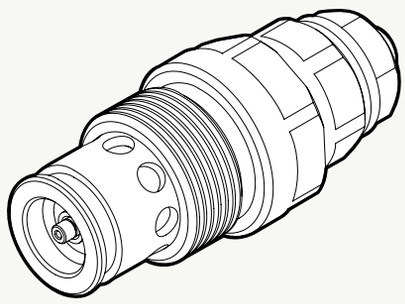	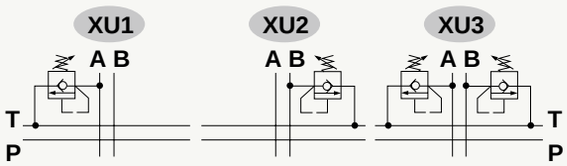 PILOT OPERATED ANTI-SHOCK VALVE AND ANTI-CAVITATION VALVE 引導式緩衝閥	MB2	
		MB3	
		MB4	
		MB5	
		MSB3	
		MSB5	
		SN3	
		SN4	
		SN6	YLWSN85015
		SN8	YLWSN85015

Type P3T		Product	Code
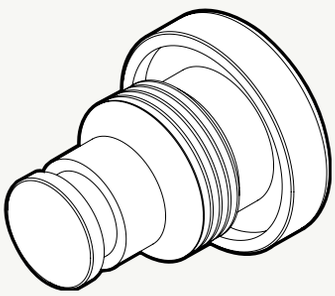	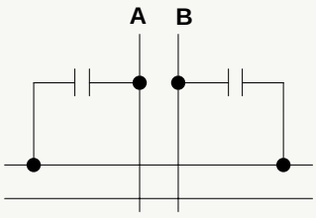 PLUG 塞頭	MB2	
		MB3	
		MB4	
		MB5	
		MSB3	
		MSB5	
		SN3	YLWSN35200
		SN4	YLWSN45200
		SN6	YLWSN65200
		SN8	YLWSN65200

Port Relief
A/B 口(選購)

Type BPS-1		Product	Code
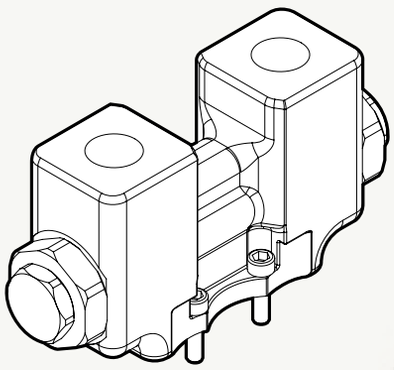	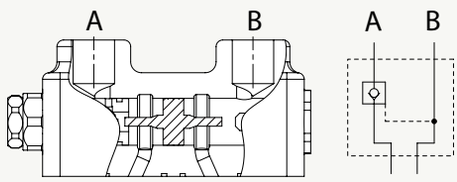 PILOT CHEC K VALVE ON PORT A 引導式單向閥，控制工作口A	MB2	
		MB3	YLMB37001
		MB4	YLMB47001
		MB5	YLMB57001
		MSB3	
		MSB5	
		SN3	YLWSN37001
		SN4	
		SN6	
		SN8	

Type BPS-2		Product	Code
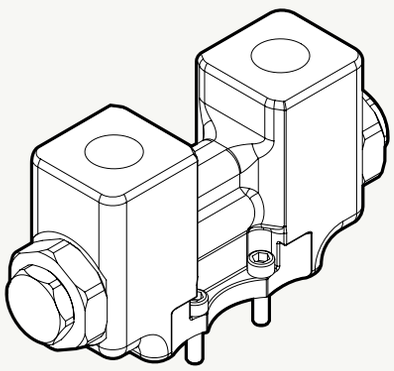	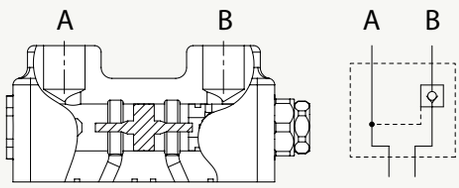 PILOT CHEC K VALVE ON PORT B 引導式單向閥，控制工作口B	MB2	
		MB3	YLMB37002
		MB4	YLMB47002
		MB5	YLMB57002
		MSB3	
		MSB5	
		SN3	YLWSN37002
		SN4	
		SN6	
		SN8	

Port Relief
A/B 口(選購)

Type BPS-3		Product	Code
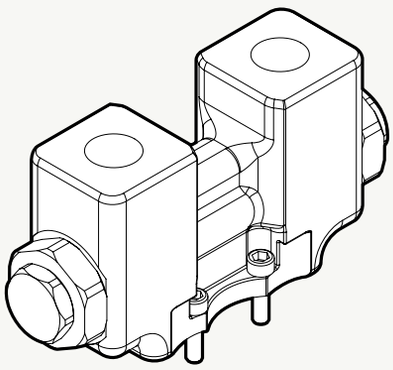	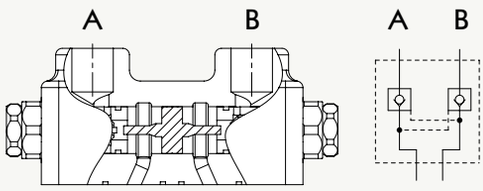 PILOT CHECK VALVE ON PORT A AND PORT B 引導式單向閥，控制工作口A與B	MB2	
		MB3	YLMB37003
		MB4	YLMB47003
		MB5	YLMB57003
		MSB3	
		MSB5	
		SN3	YLWSN37003
		SN4	
		SN6	
		SN8	

Type P-1		Product	Code
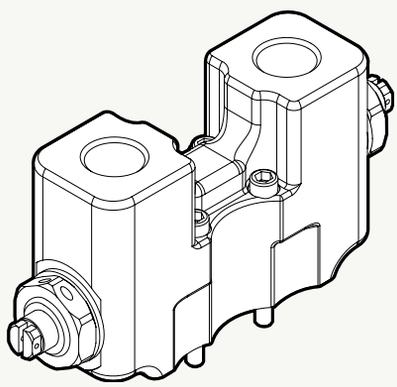	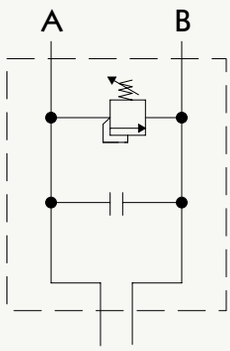 ANTI-SHOCK VALVE WITH CROSS RETURN ON PORT A 溢流閥，控制工作口A	MB2	
		MB3	YLMB36001
		MB4	YLMB46001
		MB5	YLMB56001
		MSB3	
		MSB5	
		SN3	
		SN4	
		SN6	
		SN8	

Port Relief
A/B 口(選購)

Type P-2		Product	Code
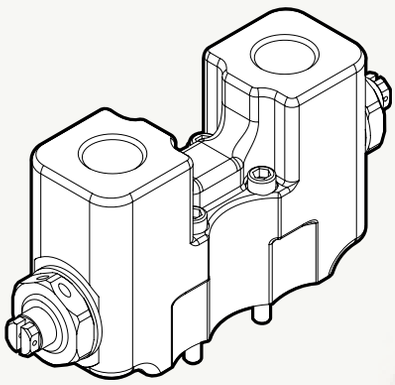	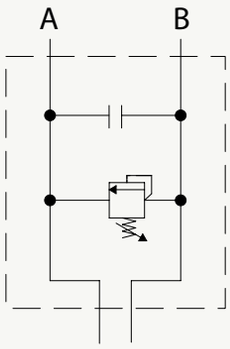 ANTI-SHOCK VALVE WITH CROSS RETURN ON PORT B 溢流閥，控制工作口B	MB2	
		MB3	YLMB36002
		MB4	YLMB46002
		MB5	YLMB56002
		MSB3	
		MSB5	
		SN3	
		SN4	
		SN6	
		SN8	

Type P-3		Product	Code
溢流閥 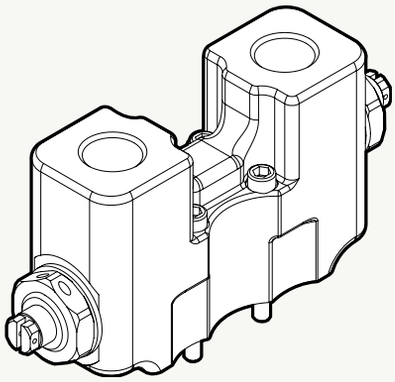	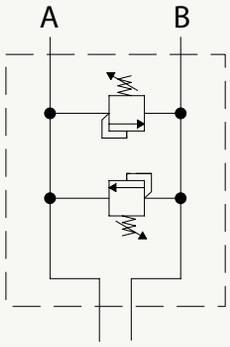 ANTI-SHOCK VALVE WITH CROSS RETURN ON PORT A AND PORT B 溢流閥，控制工作口A與B	MB2	
		MB3	YLMB36003
		MB4	YLMB46003
		MB5	YLMB56003
		MSB3	
		MSB5	
		SN3	
		SN4	
		SN6	
		SN8	

Unloading Valve (Normally Open)
卸載閥–常開(NO) (選購)

Type DUMP (NO) 12VDC		Product	Code
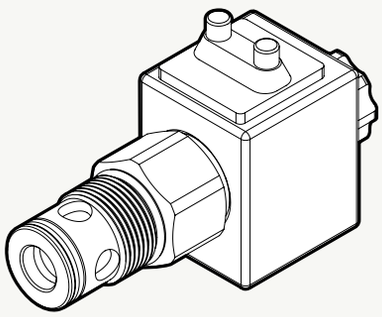	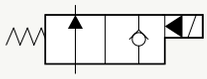 NO UNLOADING VALVE (NO) 卸載閥(常開)	MB2	
		MB3	YLMB35412
		MB4	YLMB45412
		MB5	YLMB55412
		MSB3	YLMSB35412
		MSB5	YLMSB55412
		SN3	YLPSN35012
		SN4	YLPSN45012 YLPSN45012P
		SN6	YLPSN65012
		SN8	

Type DUMP (NO) 24VDC		Product	Code
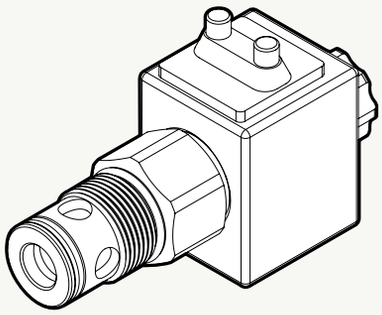	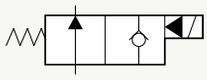 NO UNLOADING VALVE (NO) 卸載閥(常開)	MB2	
		MB3	YLMB35424
		MB4	YLMB45424
		MB5	YLMB55424
		MSB3	YLMSB35424
		MSB5	YLMSB55424
		SN3	YLPSN35024
		SN4	YLPSN45024 YLPSN45024P
		SN6	YLPSN65024
		SN8	

Unloading Valve (Normally Closed)

卸載閥-常閉(NC)(選購)

Type DUMP (NC) 12VDC		Product	Code
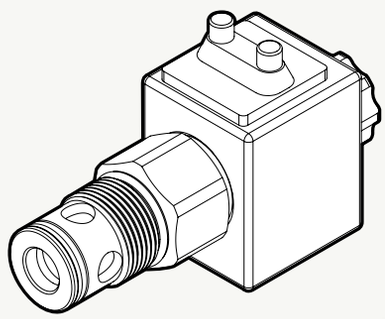	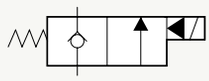 NC UNLOADING VALVE (NC) 卸載閥(常閉)	MB2	
		MB3	YLMB354121
		MB4	YLMB454121
		MB5	YLMB554121
		MSB3	YLMSB354121
		MSB5	YLMSB554121
		SN3	YLPSN350121
		SN4	YLPSN450121 YLPSN450121P
		SN6	YLPSN650121
		SN8	

Type DUMP (NC) 24VDC		Product	Code
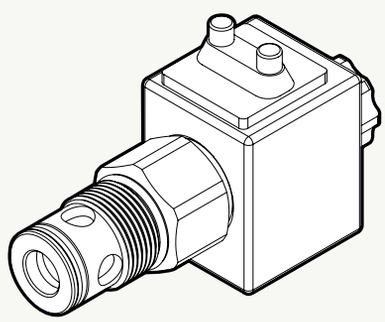	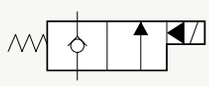 NC UNLOADING VALVE (NC) 卸載閥(常閉)	MB2	
		MB3	YLMB354241
		MB4	YLMB454241
		MB5	YLMB554241
		MSB3	YLMSB354241
		MSB5	YLMSB554241
		SN3	YLPSN350241
		SN4	YLPSN450241 YLPSN450241P
		SN6	YLPSN650241
		SN8	

Intermediate Block Vlave For Sectional Type
片式閥–中間工作塊(選購)

Type EGI	片式閥，中間入油油路板	Product	Code
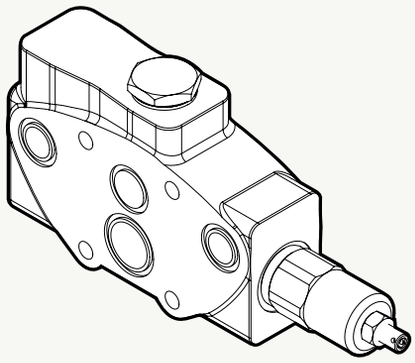	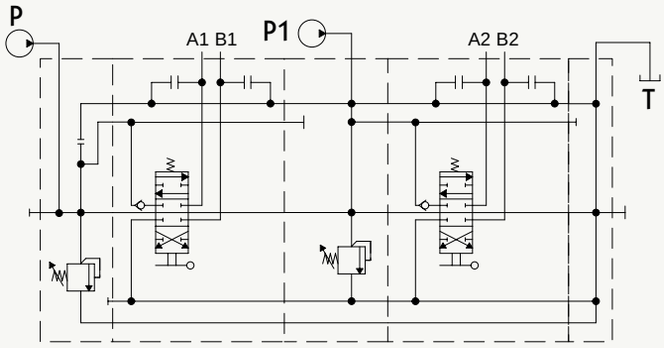 SERVICE RELIEF VALVE SECTION	SN3	EGISN302 EGISN303 EGISN304 EGISN3X
		SN4	EGISN402 EGISN403 EGISN404 EGISN4X
		SN6	EGISN602 EGISN603 EGISN604 EGISN6X
		SN8	EGISN8X

- **Pressure range 壓力範圍** 02 : 40~80 bar 03 : 63~200 bar 04 : 160~315 bar
- **Pilot operated pressure range 引導式調壓** X : 25~315 bar

Type EPCF	片式閥，壓力補償流量調整油路板	Product	Code
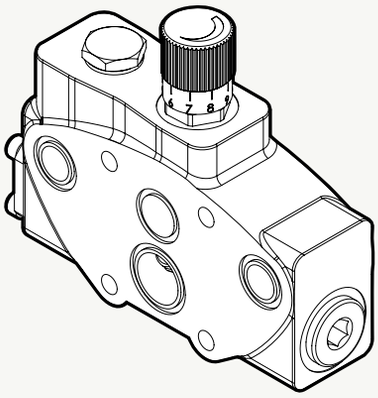	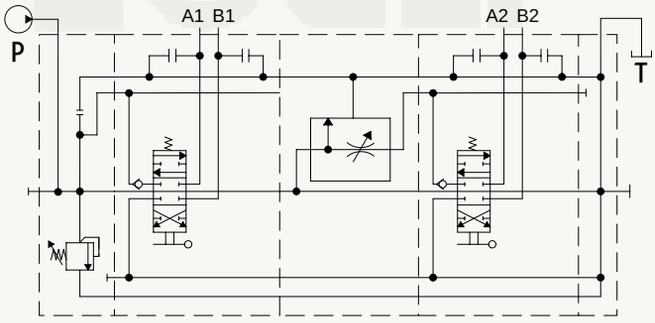 PRESSURE COMPENSATED FLOW DIVIDER SECTION	SN3	EPCFSN301
		SN4	EPCFSN401
		SN6	EPCFSN601
		SN8	EPCFSN801

Type ECS	片式閥，中間回油油路板	Product	Code
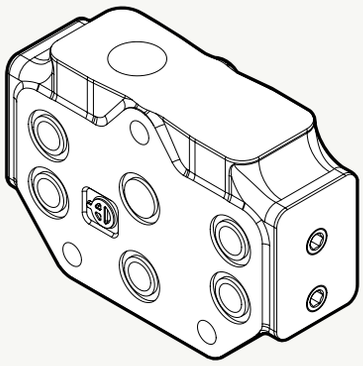	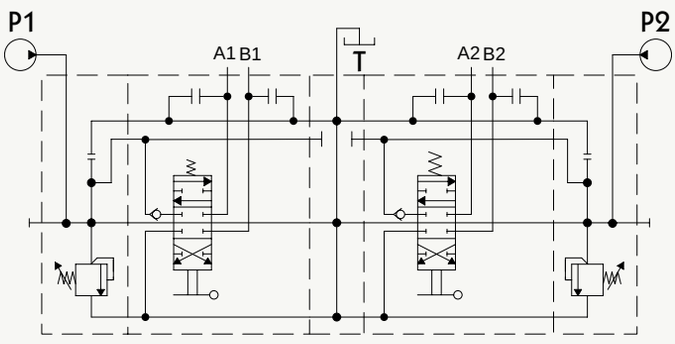 MID RETURN SECTION	SN3	ECSSN301
		SN4	ECSSN401
		SN6	ECSSN601
		SN8	ECSSN801

Mechanical Rotary Spool Control Type (3 ways)
手動轉向控制(通口數 -3)

EXAMPLE-Order Code:

RA3 - 3 - 1 - E

1 2 3 4

- r A- available to 3/6 ways
  通口數能達到 3通/6通

1	Valve type 型號
2	No. of ways 通口數
3	Spool type 心軸規格 (see page 47 / 請參考P 47)
4	Thread type 螺紋規格

Type RA 3

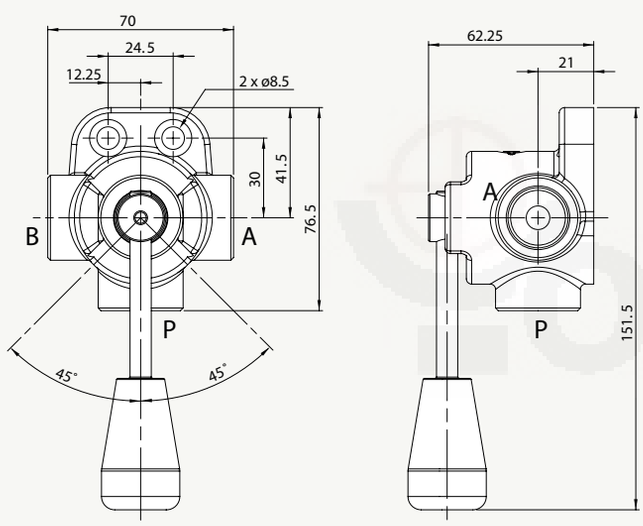

3 way diverter valve 3 口換向閥

Nominal flow ratin g 額定流量		60 L/min	16 US gpm
Operating pressure (Max.) 使用壓力 (最大)		315 ba r	4650 ps i
Fluid temperatur e 流體溫度	with NBR seal s O環 (NBR)	-20°C~80°C	-4°F~176°F
	with FPM seal s O環 (FPM)	-20°C~100°C	-4°F~212°F
Viscosity 黏度係數	Operating range 建議使用範圍	15 mm ^{2}/s~75 mm ^{2}/s	15~75 cst
	Max. 最大	400 mm ^{2}/s	400 cs t
	Min. 最小	12 mm ^{2}/s	12 cs t
Ambient temperatur e 環境溫度		-40°C~60°C	-40°F~140°F

Standard threads

PORTS	BS P	UN-UN F
P	G 3/8	3/4 - 16 (SAE 8)
A	G 3/8	3/4 - 16 (SAE 8)
B	G 3/8	3/4 - 16 (SAE 8)

Type RA 5

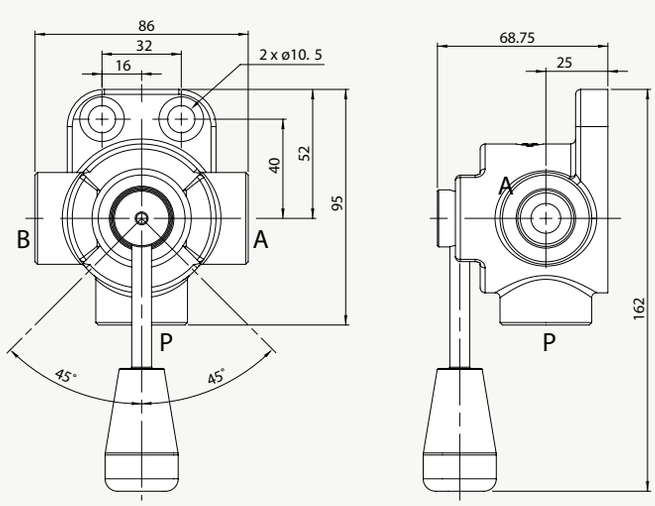

3 way diverter valve 3 口換向閥

Nominal flow ratin g 額定流量		90 L/min	24 US gpm
Operating pressure (Max.) 使用壓力 (最大)		315 ba r	4600 ps i
Fluid temperatur e 流體溫度	with NBR seal s O環 (NBR)	-20°C~80°C	-4°F~176°F
	with FPM seal s O環 (FPM)	-20°C~100°C	-4°F~212°F
Viscosity 黏度係數	Operating range 建議使用範圍	15 mm ^{2}/s~75 mm ^{2}/s	15~75 cst
	Max. 最大	400 mm ^{2}/s	400 cs t
	Min. 最小	12 mm ^{2}/s	12 cs t
Ambient temperatur e 環境溫度		-40°C~60°C	-40°F~140°F

Standard threads

PORTS	BS P	UN-UN F
P	G 1/2	7/8 - 14 (SAE 10)
A	G 1/2	7/8 - 14 (SAE 10)
B	G 1/2	7/8 - 14 (SAE 10)

Mechanical Rotary Spool Control Type (3 ways)
手動轉向控制(通口數-3)

Type RA 6

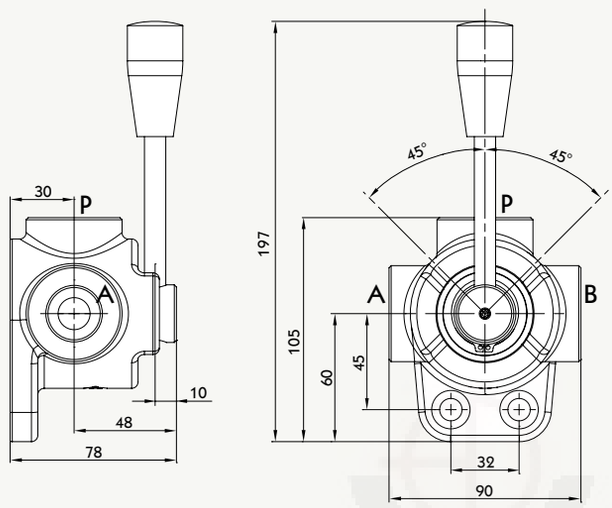

3 way diverter valve 3 口換向閥

Nominal flow rating 額定流量		140 L/min	37 US gpm
Operating pressure (Max.) 使用壓力 (最大)		315 bar	4600 psi
Fluid temperature 流體溫度	with NBR seals O環 (NBR)	-20°C~80°C	-4°F~176°F
	with FPM seals O環 (FPM)	-20°C~100°C	-4°F~212°F
Viscosity 黏度係數	Operating range 建議使用範圍	15 mm^2/s~75 mm^2/s	15~75 cst
	Max. 最大	400 mm^2/s	400 cst
	Min. 最小	12 mm^2/s	12 cst
Ambient temperature 環境溫度		-40°C~60°C	-40°F~140°F

Standard threads

PORTS	BSP	UN-UNF
A	G 3/4	1 1/16-12 (SAE 12)
B	G 3/4	1 1/16-12 (SAE 12)
C	G 3/4	1 1/16-12 (SAE 12)
T	G 3/4	1 1/16-12 (SAE 12)

Type RA 7

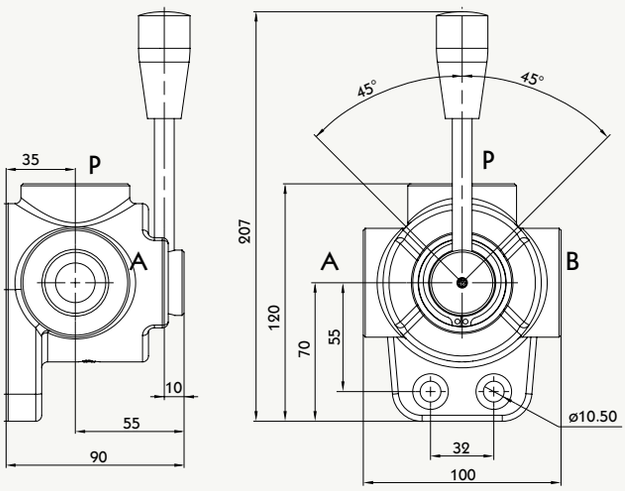

3 way diverter valve 3 口換向閥

Nominal flow rating 額定流量		200 L/min	53 US gpm
Operating pressure (Max.) 使用壓力 (最大)		250 bar	3600 psi
Fluid temperature 流體溫度	with NBR seals O環 (NBR)	-20°C~80°C	-4°F~176°F
	with FPM seals O環 (FPM)	-20°C~100°C	-4°F~212°F
Viscosity 黏度係數	Operating range 建議使用範圍	15 mm^2/s~75 mm^2/s	15~75 cst
	Max. 最大	400 mm^2/s	400 cst
	Min. 最小	12 mm^2/s	12 cst
Ambient temperature 環境溫度		-40°C~60°C	-40°F~140°F

Standard threads

PORTS	BSP	UN-UNF
A	G 1	1 5/16-12(SAE 16)
B	G 1	1 5/16-12(SAE 16)
C	G 1	1 5/16-12(SAE 16)
T	G 1	1 5/16-12(SAE 16)

Mechanical Rotary Spool Control Type (3 ways)
手動轉向控制(通口數 -3)

Type RA8

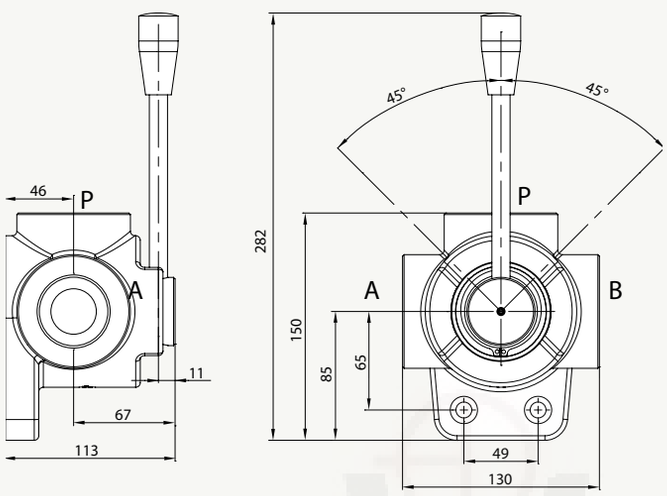

3 way diverter valve 3 口換向閥

Nominal flow rating 額定流量		280 L/min	74 US gpm
Operating pressure (Max.) 使用壓力 (最大)		210 bar	3050 psi
Fluid temperature 流體溫度	with NBR seals O環 (NBR)	-20°C~80°C	-4°F~176°F
	with FPM seals O環 (FPM)	-20°C~100°C	-4°F~212°F
Viscosity 黏度係數	Operating range 建議使用範圍	15 mm²/s~75 mm²/s	15~75 cst
	Max. 最大	400 mm²/s	400 cst
	Min. 最小	12 mm²/s	12 cst
Ambient temperature 環境溫度		-40°C~60°C	-40°F~140°F

Standard threads

PORTS	BS P	UN-UNF
A	G 1 1/2	1 7/8-12 (SAE 24)
B	G 1 1/2	1 7/8-12 (SAE 24)
C	G 1 1/2	1 7/8-12 (SAE 24)
T	G 1 1/2	1 7/8-12 (SAE 24)

RA SPOOL TYPE 心軸規格

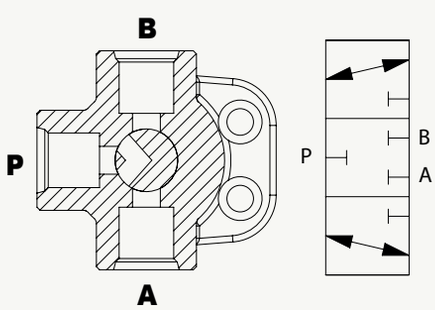

SPOOL TYPE - 1

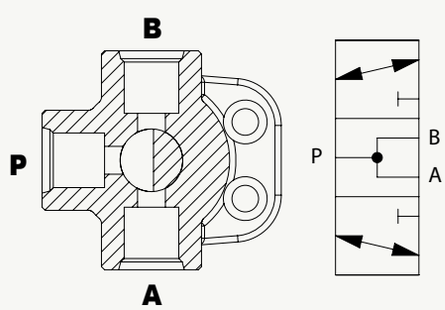

SPOOL TYPE - 2

RACS POOL TYPE 心軸規格

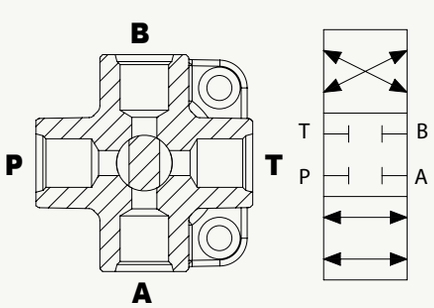

SPOOL TYPE - 1

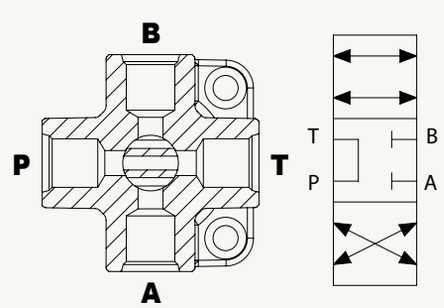

SPOOL TYPE - 2

Mechanical Rotary Spool Control Type (4 ways)
手動旋轉控制(通口數-4)

EXAMPLE-Order Code:

RAC3 - 4 - 1 - E

1 2 3 4

- RAC- available to 4/8 ways
  通口數能達到 4通/8通

1	Valve type 型號
2	No. of ways 通口數
3	Spool type 心軸規格 (see page 47 / 請參考P 47)
4	Thread type 螺紋規格

Type RAC 3

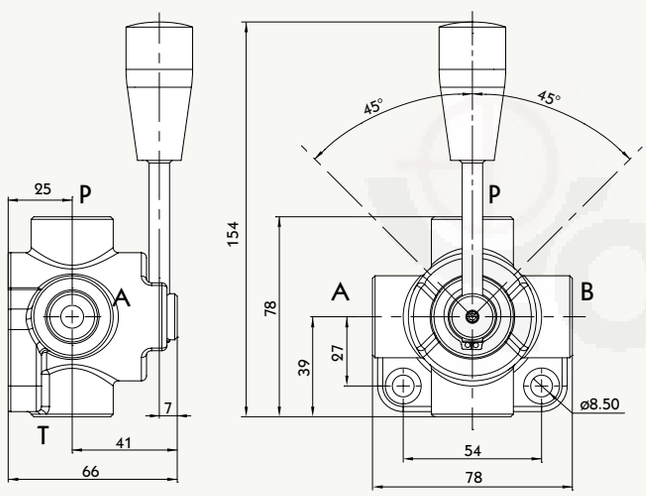

4 way diverter valve 4 口 換 向 閥

Nominal flow rating 額定流量		60 L/min	16 US gpm
Operating pressure (Max.) 使用壓力 (最大)		315 bar	4600 psi
Fluid temperature 流體溫度	with NBR seals O環 (NBR)	-20°C~80°C	-4°F~176°F
	with FPM seals O環 (FPM)	-20°C~100°C	-4°F~212°F
Viscosity 黏度係數	Operating range 建議使用範圍	15 mm^2/s~75 mm^2/s	15~75 cst
	Max. 最大	400 mm^2/s	400 cst
	Min. 最小	12 mm^2/s	12 cst
Ambient temperature 環境溫度		-40°C~60°C	-40°F~140°F

Standard threads

PORTS	BSP	UN-UNF
A	G 3/8	3/4 - 16 (SAE 8)
B	G 3/8	3/4 - 16 (SAE 8)
C	G 3/8	3/4 - 16 (SAE 8)
T	G 3/8	3/4 - 16 (SAE 8)

Type RAC 5

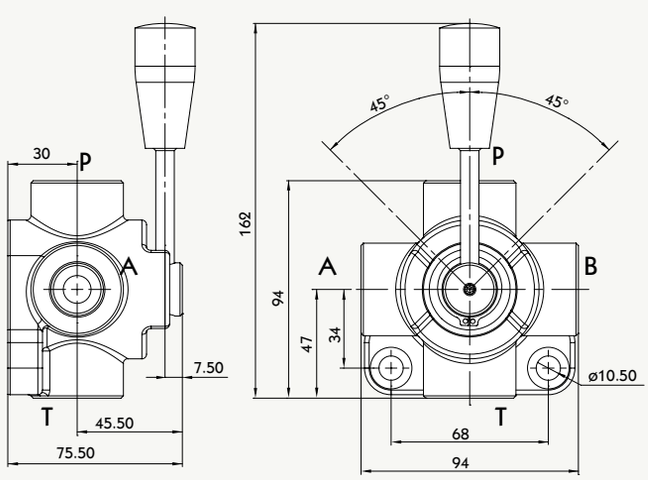

4 way diverter valve 4 口 換 向 閥

Nominal flow rating 額定流量		90 L/min	24 US gpm
Operating pressure (Max.) 使用壓力 (最大)		315 bar	4600 psi
Fluid temperature 流體溫度	with NBR seals O環 (NBR)	-20°C~80°C	-4°F~176°F
	with FPM seals O環 (FPM)	-20°C~100°C	-4°F~212°F
Viscosity 黏度係數	Operating range 建議使用範圍	15 mm^2/s~75 mm^2/s	15~75 cst
	Max. 最大	400 mm^2/s	400 cst
	Min. 最小	12 mm^2/s	12 cst
Ambient temperature 環境溫度		-40°C~60°C	-40°F~140°F

Standard threads

PORTS	BSP	UN-UNF
A	G 1/2	7/8-14 (SAE 10)
B	G 1/2	7/8-14 (SAE 10)
C	G 1/2	7/8-14 (SAE 10)
T	G 1/2	7/8-14 (SAE 10)

Mechanical Rotary Spool Control Type (4 ways)
手動旋轉控制(通口數 -4)

Type R AC 6

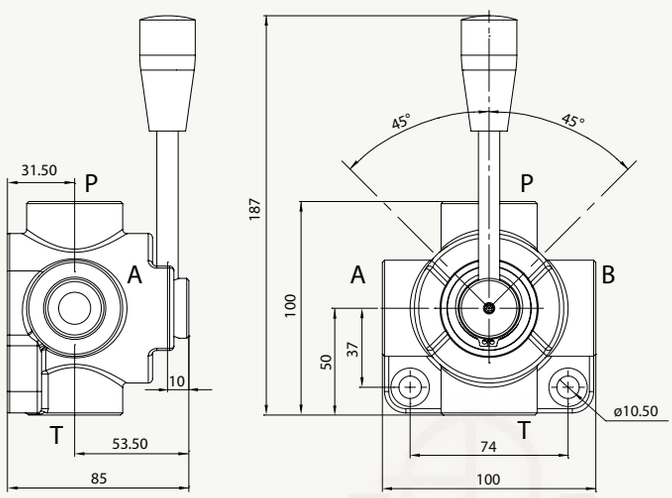

4 way diverter valve 4 口換向閥

Nominal flow ratin g 額定流量		140 L/min	37 US gpm
Operating pressure (Max.) 使用壓力 (最大)		315 ba r	4600 ps i
Fluid temperatur e 流體溫度	with NBR seal s O環 (NBR)	-20°C~80°C	-4°F~176°F
	with FPM seal s O環 (FPM)	-20°C~100°C	-4°F~212°F
Viscosity 黏度係數	Operating range 建議使用範圍	15 mm ^{2}/s~75 mm ^{2}/s	15~75 cst
	Max. 最大	400 mm ^{2}/s	400 cs t
	Min. 最小	12 mm ^{2}/s	12 cs t
Ambient temperatur e 環境溫度		-40°C~60°C	-40°F~140°F

Standard threads

PORTS	BS P	UN-UN F
A	G 3/4	1 1/16-12 (SAE 12)
B	G 3/4	1 1/16-12 (SAE 12)
C	G 3/4	1 1/16-12 (SAE 12)
T	G 3/4	1 1/16-12 (SAE 12)

Type R AC 7

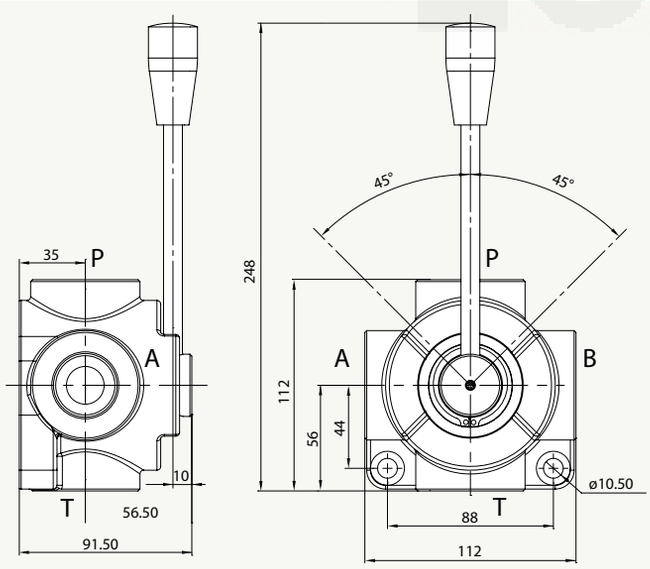

4 way diverter valve 4 口換向閥

Nominal flow ratin g 額定流量		200 L/min	53 US gpm
Operating pressure (Max.) 使用壓力 (最大)		250 ba r	3600 ps i
Fluid temperatur e 流體溫度	with NBR seal s O環 (NBR)	-20°C~80°C	-4°F~176°F
	with FPM seal s O環 (FPM)	-20°C~100°C	-4°F~212°F
Viscosity 黏度係數	Operating range 建議使用範圍	15 mm ^{2}/s~75 mm ^{2}/s	15~75 cst
	Max. 最大	400 mm ^{2}/s	400 cs t
	Min. 最小	12 mm ^{2}/s	12 cs t
Ambient temperatur e 環境溫度		-40°C~60°C	-40°F~140°F

Standard threads

PORTS	BS P	UN-UN F
A	G 1	1 5/16-12 (SAE 16)
B	G 1	1 5/16-12 (SAE 16)
C	G 1	1 5/16-12 (SAE 16)
T	G 1	1 5/16-12 (SAE 16)

Solenoid Operated Sectional Type
電控片式換向閥

Type SCS

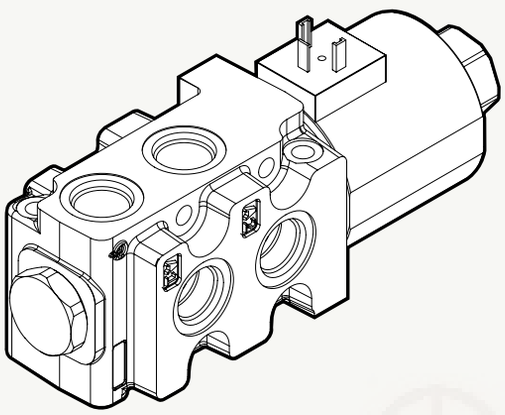

solenoid control section valve 電控換向閥

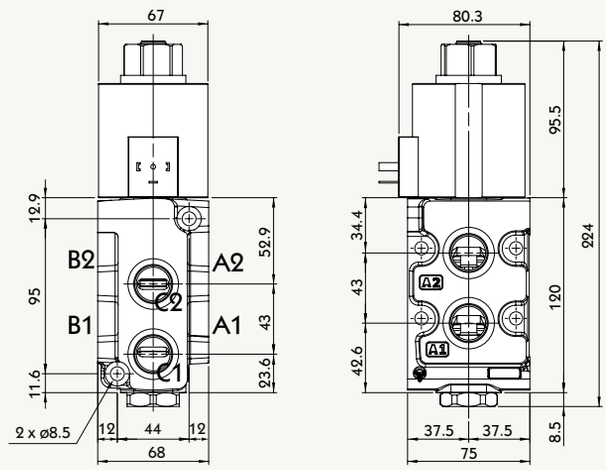

Nominal flow rating 額定流量		80 L/min	21 US gpm
Operating pressure (Max.) 使用壓力 (最大)	with drain 帶回油	315 bar	4600 psi
	without drain 不帶回油	200 bar	2900 psi
Fluid temperature 流體溫度	with NBR seals O環 (NBR)	-20°C~80°C	-4°F~176°F
	with FPM seals O環 (FPM)	-20°C~100°C	-4°F~212°F
Viscosity 黏度係數	Operating range 建議使用範圍	15mm²/s~75mm²/s	15~75 cst
	Max. 最大	400mm²/s	400 cst
	Min. 最小	12mm²/s	12 cst
Ambient temperature 環境溫度		-40°C~60°C	-40°F~140°F

Standard threads

PORTS	BSP	UN-UNF
P	G 1/2	7/8 - 14 (SAE 10)
A	G 1/2	7/8 - 14 (SAE 10)
B	G 1/2	7/8 - 14 (SAE 10)

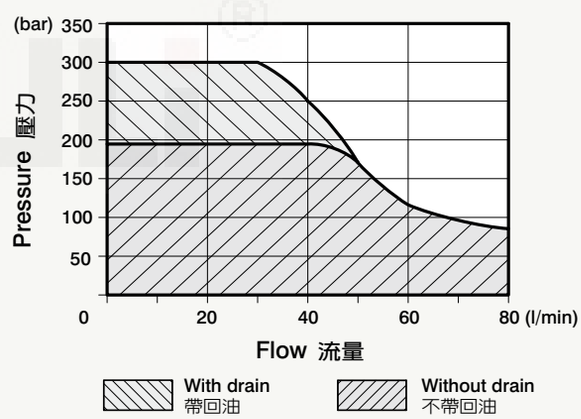

SOLENOID CONTROL DIVERTER VALVE

EXAMPLE-Order Code: SCS4 - 1S - 1 W - 1 E

1 2 3 4 5 6

1	Valve type 型號
2	No. of section 聯數
3	Spool type 心軸規格
4	Positioner kit 接頭規格
5	Coil type 線圈規格
6	Thread type 螺紋規格

- SCS-4 available sections from 1 TO 3
- 可使用聯數 1 到 3

TYPE DESCRIPTION

W: Spring return in position 1 不帶回油
Y: Spring return in position 1, with drain port 帶回油

SPOOL TYPE 心軸規格

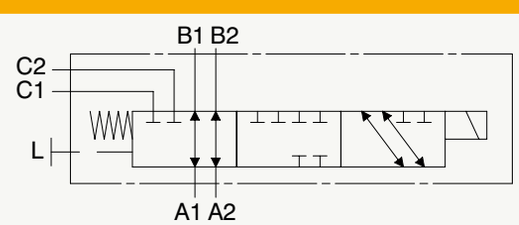

Flexible Cable Remote Controls (One Section Operation)
纜線遠程控制器(單軸)

Type RCC

RCC Available sections from 1 to 7
(RCC- 可使用聯數為第 1聯 - 第 7聯)

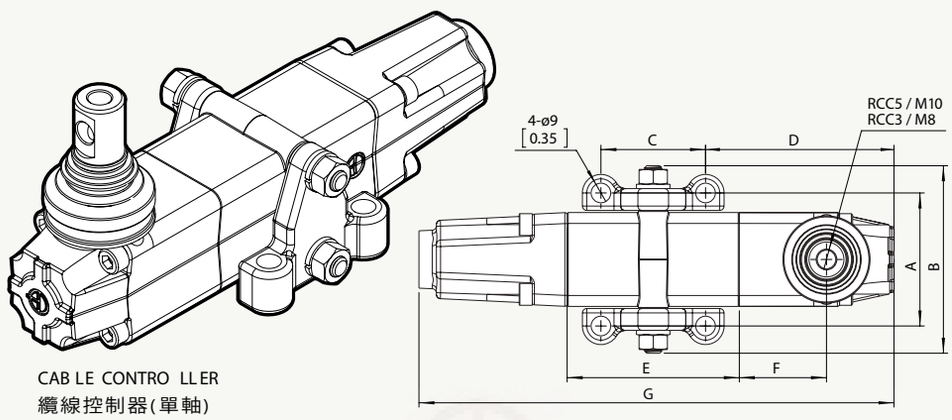

CABLE CONTROLLER
纜線控制器(單軸)

Product	Code
MB2	RCC -3
MB3	RCC -3
MB4	RCC -3
MB5	RCC -5
MSB3	RCC -3
MSB5	RCC -5
SN3	RCC -3
SN4	RCC -5
SN6	RCC -5
SN8	RCC -5

TYPE	RCC5/1		RCC5/2		RCC5/3		RCC5/4		RCC5/5		RCC5/6		RCC5/7		RCC3/1		RCC3/2		RCC3/3		RCC3/4		RCC3/5		RCC3/6		RCC3/7	
	mm	in	mm	in	mm	in	mm	in	mm	in	mm	in	mm	in	mm	in	mm	in	mm	in	mm	in	mm	in	mm	in	mm	in
A	61	2.4	106	4.17	151	5.94	196	7.72	241	9.49	286	11.26	331	13.03	56	2.20	96	3.78	136	5.35	176	6.93	216	8.50	256	10.08	296	11.65
B	86	3.39	131	5.16	176	6.93	221	8.7	266	10.47	311	12.24	356	14.02	73	2.87	113	4.45	153	6.02	193	7.60	233	9.17	273	10.74	313	12.32
C	48	1.89	F		40	1.57									40	1.57	F		30	1.18								
D	86.5	3.41	G		218	8.58									58.5	2.3	G		191	7.52								
E	79	3.11													45	1.77												

Type RC

RC Available sections from 1 to 4
(RC- 可使用聯數為第 1聯 - 第 4聯)

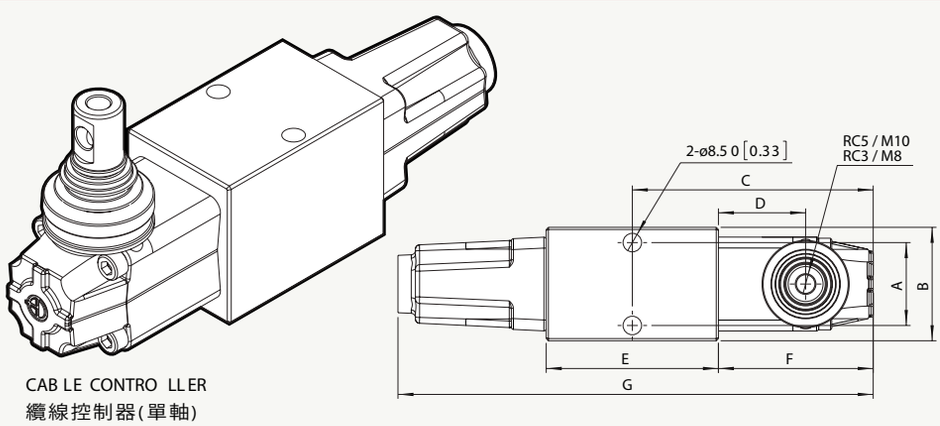

CABLE CONTROLLER
纜線控制器(單軸)

Product	Code
MB2	RC-3
MB3	RC-3
MB4	RC-3
MB5	RC-5
MSB3	RC-3
MSB5	RC-5
SN3	RC-3
SN4	RC-5
SN6	RC-5
SN8	RC-5

TYPE	RC5/ 1		RC5/2		RC5/ 3		RC5/4		RC3/ 1		RC3/ 2		RC3/ 3		RC3/ 4	
	mm	in	mm	in	mm	in	mm	in	mm	in	mm	in	mm	in	mm	in
A	38	1.50	85	3.35	130	5.12	175	6.89	33.5	1.32	74	2.91	112	4.41	150	5.91
B	52	2.04	97	3.82	142	5.59	187	7.36	45	1.77	86	3.39	124	4.88	162	6.38
C	110.5	4.35	F		71	2.80			78.5	3.09	F		56	2.21		
D	40	1.57	G		218	8.58			30	1.18	G		191	7.52		
E	79	3.11							45	1.77						

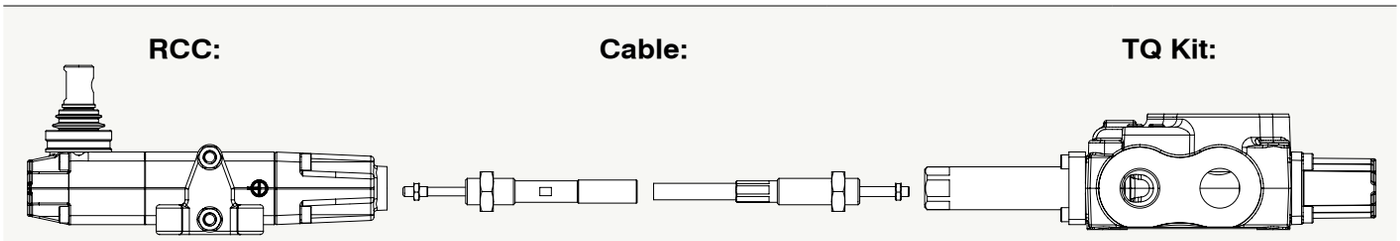

EXAMPLE-Order Code:

RCC3 - 3S - NL / HL / HL

1 2 3

RC3 - 3S - NL / HL / HL

1 2 3

1	Valve type 型號
2	Sections number 聯數
3	Type code descripiton 型號規格
	NL With lever, without spring return 不帶彈簧歸位 **HL** With lever and sprineg return 帶彈簧歸位

Remote Cable Joystick Operation Type
遠程纜線控制手柄(雙軸)

Type FCR-2	Code

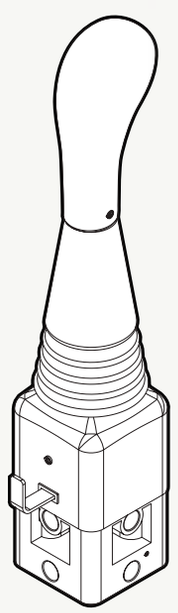

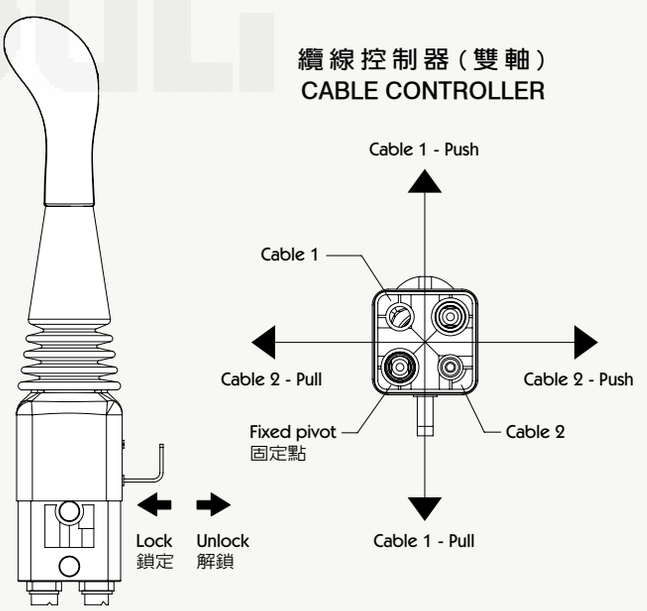

Cable:
纜線

Cable	1 M	1.5 M	2 M	2.5 M	3 M		
Code	CABLE-1000	CABLE-1500	CABLE-2000	CABLE-2500	CABLE-3000		

- Notes: Flexible cable are available in different length.
- 備註：有不同長度的纜線可以選擇。

Hydraulic Pilot Linear Operation Type
液壓引導式手柄(單軸)

Type JHP-1

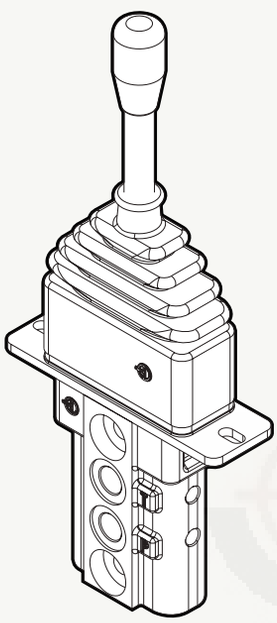

Code

Hydraulic Scheme:

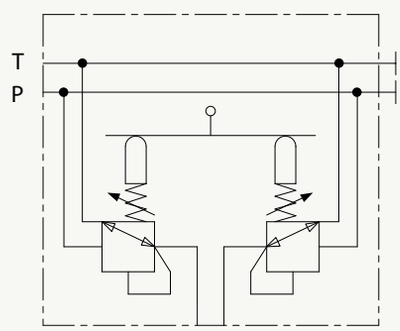

HYD RAU LIC PI LOT CONTRO LLER
OPTIONS: 8. 9-1. F D. LES
AVAI LAB LE SECTIONS FROM 1 TO 10
液壓引導控制器(單軸)

Type JHP-1

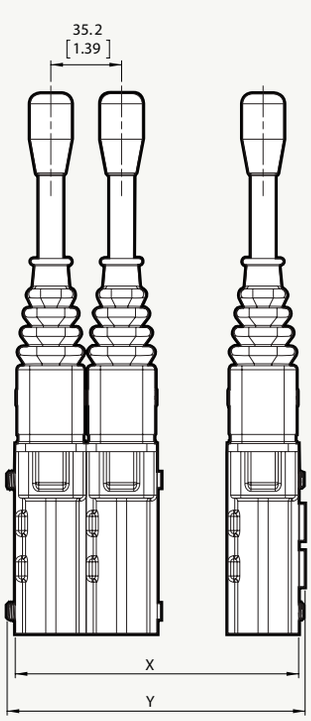

Hydraulic circuit:

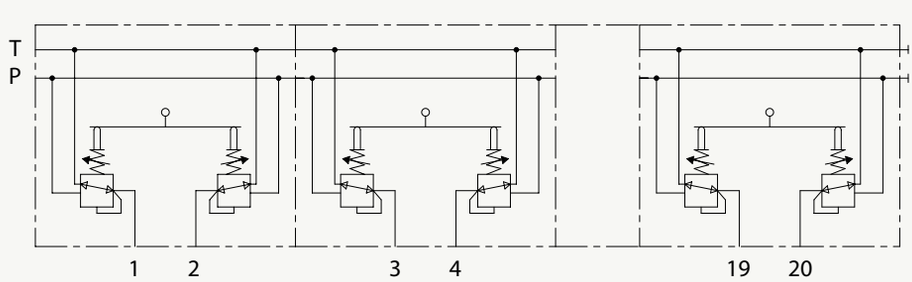

Standard threads:

TYPE	X		Y	
	mm	in	mm	in
JHP1/2	70.4	2.77	74.1	2.92
JHP1/3	105.6	4.16	109.3	4.30
JHP1/4	140.8	5.54	144.5	5.69
JHP1/5	176	6.93	179.7	7.07
JHP1/6	211.2	8.31	214.9	8.46
JHP1/7	246.4	9.70	250.1	9.85
JHP1/8	281.6	11.09	285.3	12.62
JHP1/9	316.8	12.47	320.5	12.62
JHP1/10	352	13.86	355.7	14.00

Hydraulic Pilot Linear Operation Type
液壓引導式手柄(單軸)

Type JHP-1

Pressure control curve 壓力控制曲線

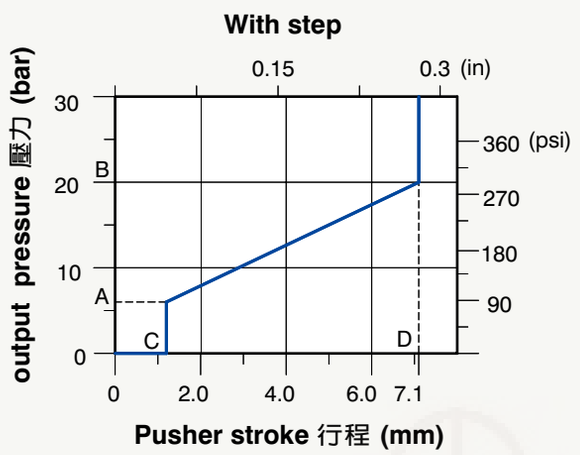

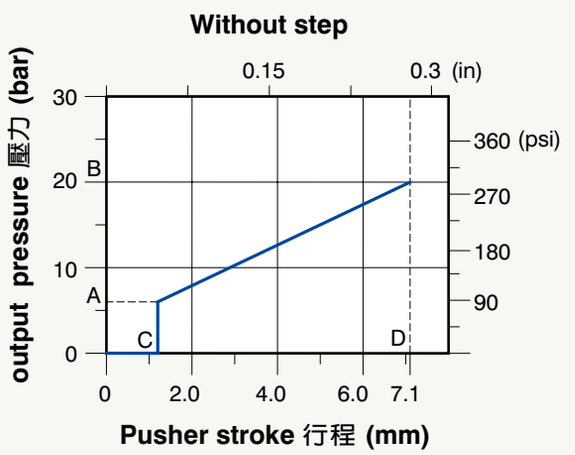

TYPE 型號	Pressure 壓力				Stroke 行程			
	A		B		C		D	
	bar	psi	bar	psi	mm	in	mm	in
01	5	72.5	19	275.5	1	0.04	7.1	0.28
02	6	87	25	362.5	1	0.04	7.1	0.28
03	8	116	42	609	0.7	0.028	7.1	0.28
04	1	14.5	9	130.5	1	0.04	7.1	0.28
05	2	29	20.5	297.3	1	0.04	7.1	0.28

Return spring type 彈簧復歸選項	
A	da 17.4N a 25.9N
B	da 22.2N a 33N
C	da 25.6N a 65.3N
D	da 78.6N a 188.1N
E	da 109.4N a 219N

Type JHP-1

Control options 控制選項

Type: 8

SPRING RETURN IN CENTER POSITION.

彈簧覆位

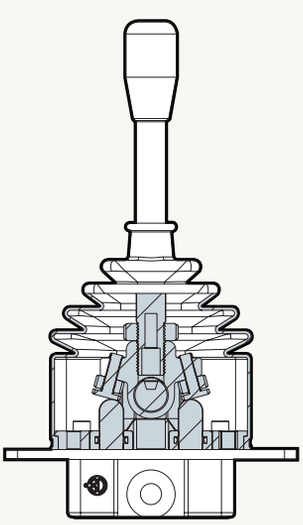

Type: FD

FRICTION DETENT, STOP IN ANY POSITION AND NEUTRAL SENSING.

摩擦定位

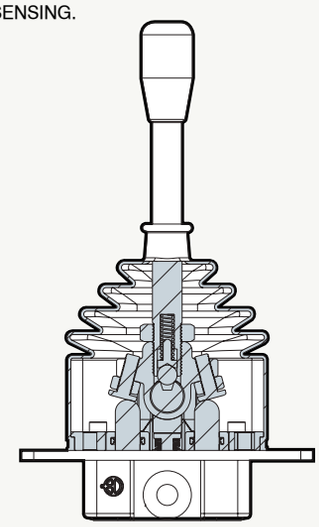

Hydraulic Pilot Linear Operation Type
液壓引導式手柄(單軸)

Type JHP-1

Type: 9-1

Detent in position 1 An D 2, spring centere D
TO NEUTRA L POSITION .
定位 1 & 2，帶彈簧覆位

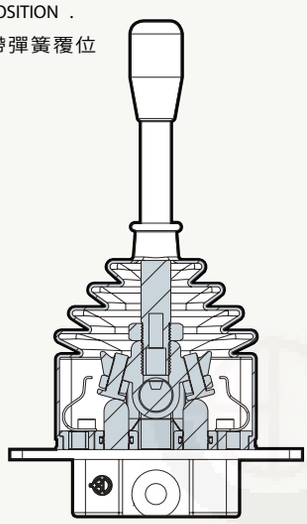

Type: LES

sAF et Y lever, Detent in neutr Al position.
安全手柄

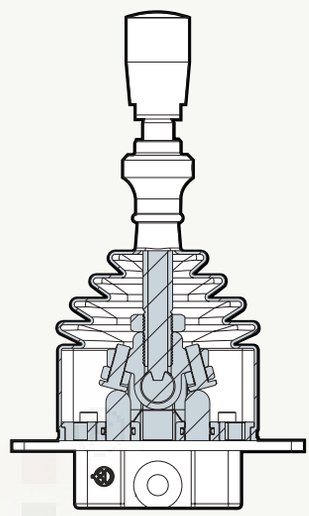

EXAMPLE-Order Code:

JHP-1 / 1S - G2 / 8 - A 01 A
1 2 3 4 5 6 7

1	Valve type 型號
2	No. of section 聯數
3	Thread type 螺紋規格
4	Control options 控制選項
5	Pressure control curve A or B 壓力控制選項
6	Pressure range 01~05 壓力選項 (see page 54 / 請參考P 54)
7	Spring return type A~E 彈簧復歸選項 (see page 54 / 請參考P 54)

Flow 流量	5~20 L/mi n	1.3~5.3 US gp m
Feeding pressure 起始壓力範圍	30~100 bar	435~1450 psi
MAX. backpressure 最大背壓	3 ba r	4.35 ps i
Internal leakage at 30 bar/435 psi 於 30 bar 的內洩量	10 ~ 18 cm ^{3} /min	0.61~1.1 in ^{3} /min
Fluid 流體設定	mineral oi l 原油	
Fluid temperatur e 流體溫度	-10 ~ 80° C	- 14 ~ 176° F
Ambient temperatur e 環境溫度	-40 ~ 60° C	- 40 ~ 140° F

Standard threads

PORTS	BS P	U N-UN F	METRIC
Inlet P	G 1/4	7/16 - 20 (SAE 4)	M12 x 1. 5
A and B port s	G 1/4	7/16 - 20 (SAE 4)	M12 x 1. 5
Outlet T and power beyond C	G 1/4	7/16 - 20 (SAE 4)	M12 x 1. 5

Hydraulic Pilot Joystick Operation Type
液壓引導式手柄(雙軸)

Type JHP-2	Code
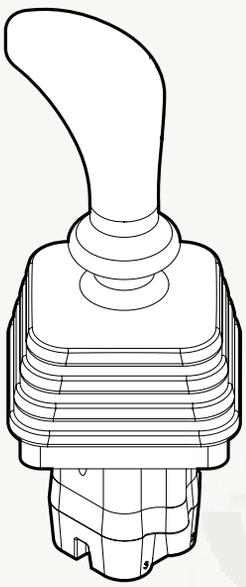	**Hydraulic Scheme:** 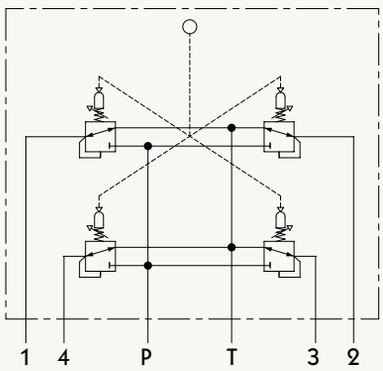 HYDRAULIC PILOT CONTROLLER 液壓引導控制器(雙軸)

Hydraulic Pilot Feet-Pedal Operation Type
液壓引導控制腳踏型(單軸)

Type PHP-1	Code
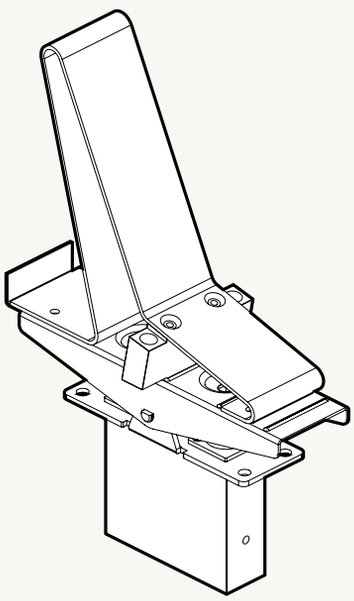	**Hydraulic Scheme:** 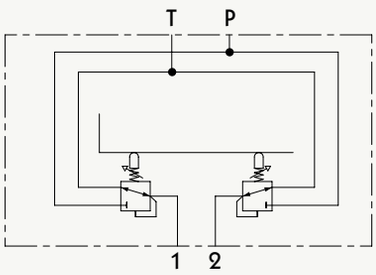 HYDRAULIC PILOT CONTROLLER 液壓引導控制器(腳踏型)