Variable Speed Drive Pump Solution

EATON

Powering Business Worldwide

Table of Contents

Saving energy. Cutting costs. Reducing noise.

Proven value and benefits

- Up to 70% energy savings
- Quieter operation
- Operating cost reductions
- Reduced or eliminated cooling needs
- Improved safety and regulation compliance
- Pump downsizing
- Eaton standard products
- Proven reliability and durability

Eaton Variable Speed Drive Pump Systems

With the costs of energy steadily rising, energy consumption is playing a more significant role than ever in the total cost of machine operation. As a result, the hydraulics industry is demanding energy efficient solutions that also meet stringent government regulations for environmental protection.

Reduced energy cost and consumption

Eaton's Variable Speed Drive and Pump Systems can help you cut energy usage by up to 70% depending on the machine duty cycle. This can help significantly reduce operating costs, so your investment can quickly pay for itself.

The proven performance and power density of Eaton's pump families combined with the smart control of Eaton Variable Speed Drives enable these systems to achieve power-on-demand more efficiently than conventional constant-speed drive pump systems. Instead of operating constantly at 1500 RPM or 1800 RPM (depending on the region), Eaton's Variable Speed Drive Pumps can be controlled to match the load requirements of the current duty cycle via intelligent control. As a result, you can eliminate energy waste.

Reduced heat production

With improved energy efficiency comes less heat production, so these systems can often allow you to downsize or even eliminate oil coolers. Otherwise, they can help reduce the amount of hydraulic oil you use and the size of your tanks, thereby extending the life of seals and oil.

Reduced noise pollution

Noise reduction is another significant benefit of running your pumps at variable speeds. The electric motor and pump speed vary constantly in an Eaton Variable Speed Drive System to match the duty cycle requirement. This results in remarkable noise reduction, which helps protect operators' hearing and meets more stringent noise regulations.

Reduced pump size

Eaton's Variable Speed Drive Pumps open the possibility of downsizing your pumps to cut costs. Because the system can run higher than 1500 RPM or 1800 RPM, you can reduce the pump displacement requirement proportionally for the same amount of flow—shrinking the machine's overall footprint.

Backed by experienced application engineering, service, training and sales support—as well as the power of one Eaton—Eaton's proven pump and variable speed drive products can be a powerful combination to resolve challenges in today's demanding market.

Markets:

- Plastics Machinery
- Press Machine
- Die Casting
- Machine Tools
- Test Equipment
- Primary Metal
- Pulp & Paper, Wood Processing
- Oil & Gas
- Marine
- General Industrial

Pump and Drive Selection Guidance

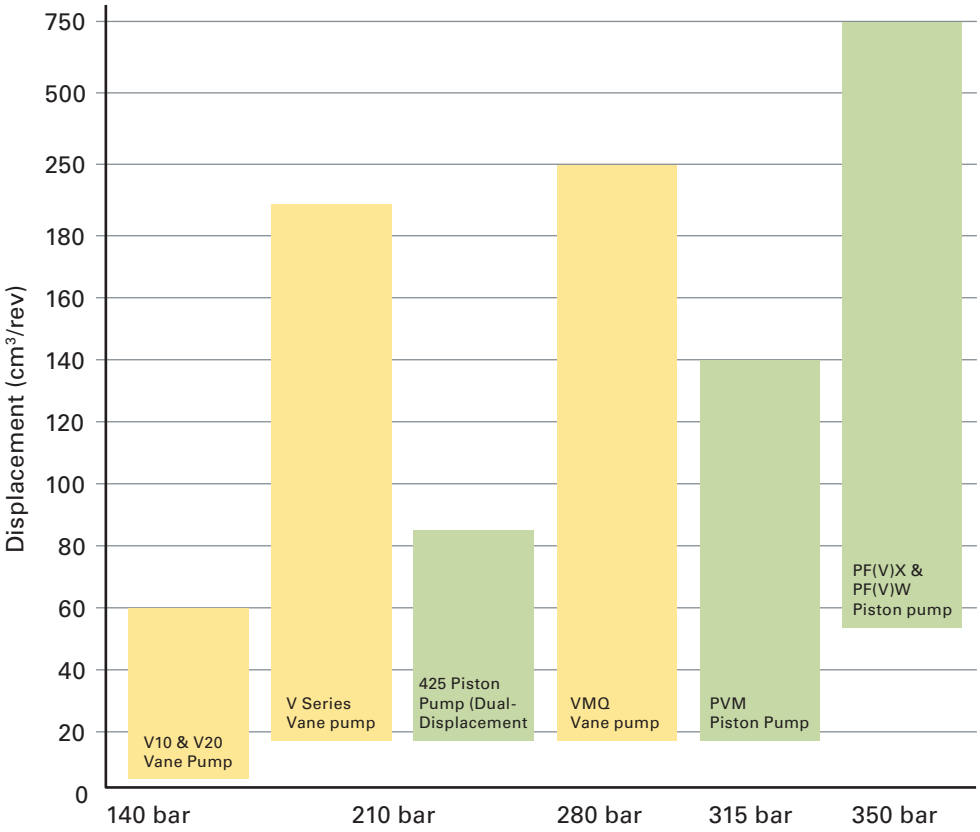

Vane Pump

V10 & V20
- 3.3 to 42 cc
- Up to 172 bar

V Series
- 7 to 193 cc
- Up to 210 bar

VMQ
- 10 to 240 cc
- Up to 290 bar

Piston pump

425 Piston Pump (Dual-Displacement
- 80cc (only)
- 210 bar

PVM
- 18 to 141 cc
- Up to 315 bar

PF(V)X & PF(V)W
- 66 to 750 cc
- 350 bar

Pump	Displacement (cc/rev)	Pressure (bar)	Min speed (rpm)	Max speed (rpm)	Hydraulic Closed-loop motion control			Hydraulic Open-loop motion control			
					Plastics	Press	Machine tool	Die casting	Oil/Gas/ Marine	Processing	General industrial
Piston											
425 series	80	210	0	2200	✓						✓
PVM	18-141	up to 315	0	up to 2800	✓	✓	✓		✓	✓	✓
PF(V)X & PV(F)W	66-750	350	0	up to 1800		✓			✓	✓	✓
Vane											
VMQ	10-240	290	200	up to 3000				✓	✓	✓	✓
V series	7-193	up to 210	200-500								✓
V10 & 20	3-42	up to 170	200-600	up to 3400			✓				✓
IMP											
Integrated motor pump package	Depending on pump choice					✓			✓	✓	✓
Drive											
Standard performance VFD, DG1								✓	✓	✓	✓
High performance VFD, SPX9000						✓	✓				

Note
1. Please consult Eaton application engineering for greater details as needed
2. See speed-pressure performance curve for details

System Components

Open-loop motion control mode

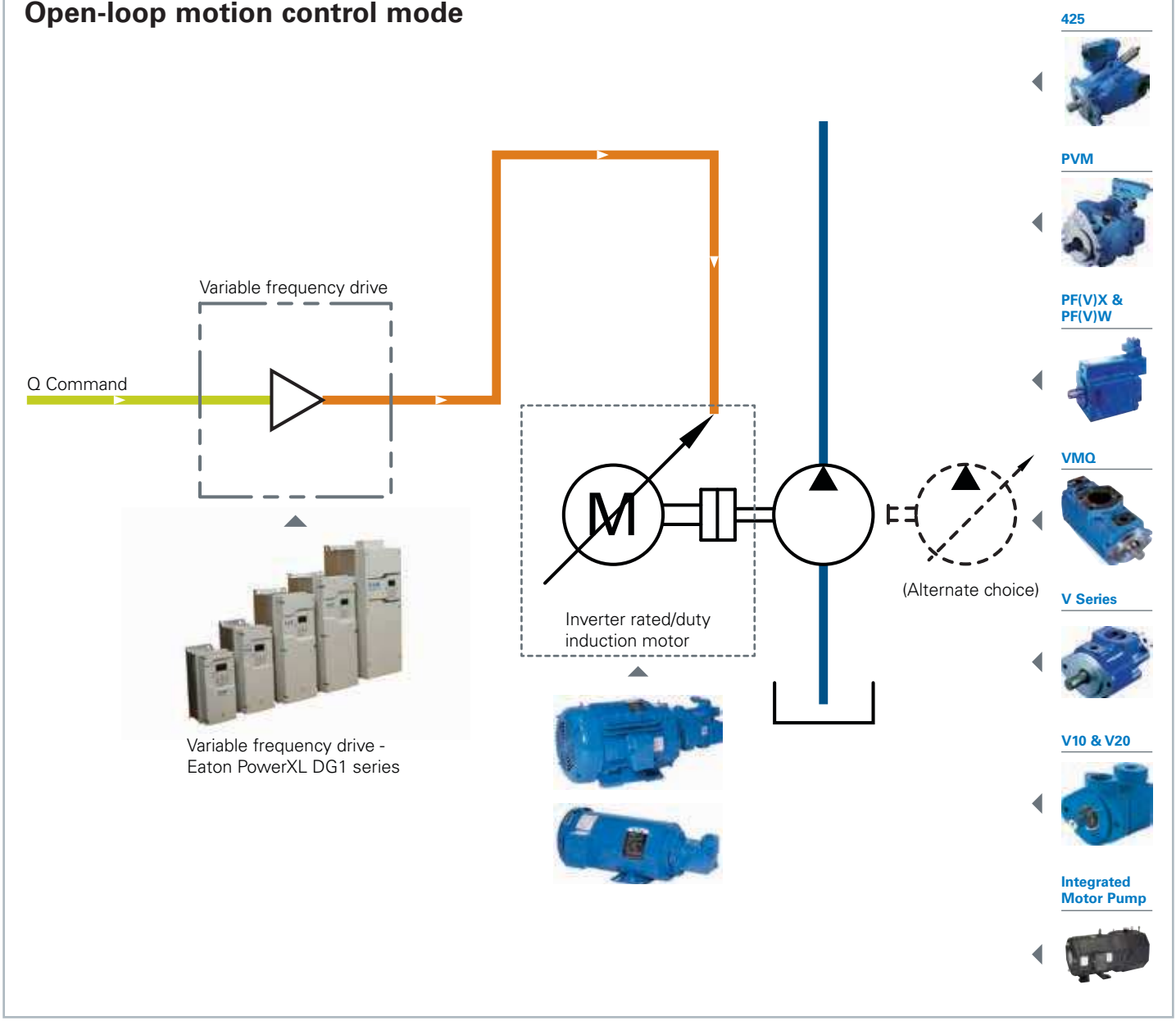

Eaton pumps:

- 425 Dual-Displacement piston pump – 210 bar, 80cc, min speed 0 rpm, max 2200 rpm
- PVM Variable piston pump – up to 315 bar, 18-141cc, min speed 0 rpm, max 2800 rpm
- PF(V)X & PF(V)W Hydrokraft Fixed and Variable piston pump – 350 bar, 66-750cc, min speed 0 rpm, max 1800 rpm
- VMQ vane pump – up to 290 bar, 10-240cc, min speed 200 rpm, max 3000 rpm
- V series vane pump – up to 210 bar, 7-193cc, min speed 200 rpm, max 1800 rpm
- V10&V20 vane pump – up to 170 bar, 3-42cc, min speed 200 rpm, max 3400 rpm

Eaton integrated motor pump (IMP) package:

- Pump choices - VMQ, V series, PVM, PVQ. See IMP section for details

Eaton drive: PowerXL DG1 series, variable frequency drive

- Up to 90KW, 230V/480/575V
- IP21/54 environmental protection rating
- Standard I/O - 8DI, 1DO; 2AI, 2AO; 2FC, 1FA relays
- Built-in communications - EtherNet/IP, Modbus TCP; Modbus RTU, BACnet MS/TP

Inverter rated/duty induction motor – customer choice

System Components

Closed-loop motion control mode

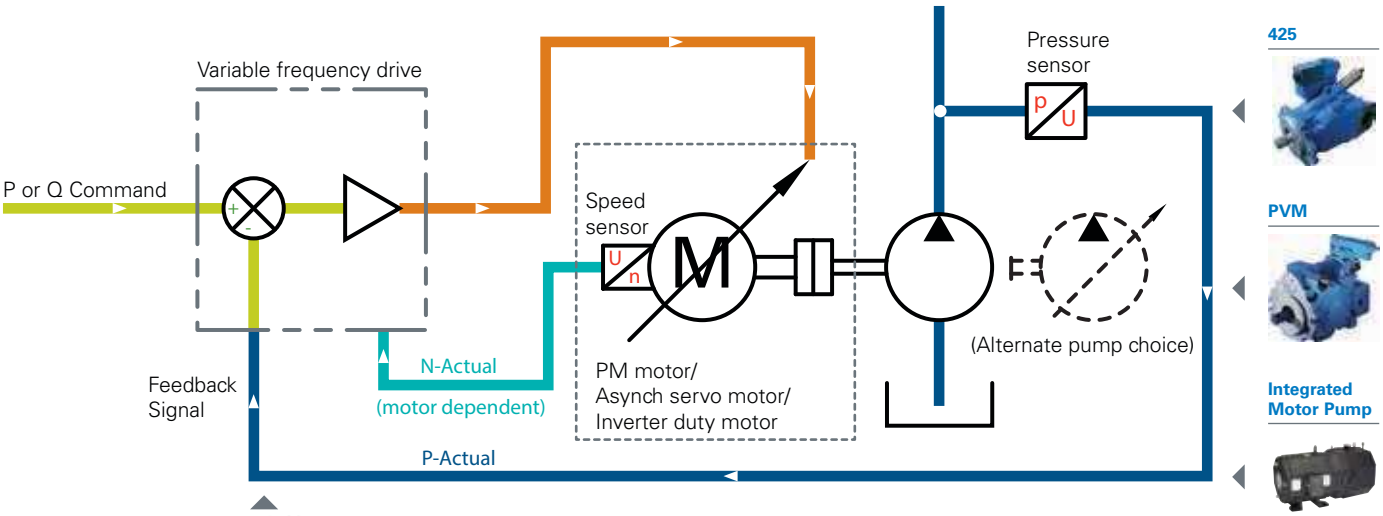

Variable frequency drive - SPX 9000 Series (high performance with hydraulics closed-loop motion control capability)

Eaton pumps:

- 425 Dual-Displacement piston pump – 210 bar, 80cc, min speed 0 rpm, max 2200 rpm
- PVM Variable piston pump – up to 315 bar, 18-141cc, min speed 0 rpm, max up to 2800 rpm

Eaton drive: SPX9000 series, high performance variable frequency drive

- Up to 1500 KW, 230V/480V/575V
- Extensive bus communication protocols, such as Ethernet/IP, Profibus DP, CANopen, etc.

PM motor/asynchronous servo motor/inverter duty motor, customer choice

425 Piston Pump

Model code - dual displacement

For additional information please refer 420 Piston pump catalog E-PUPI-TM002-E4

AEW	080	R	04	AD	4	4	A	0A	00	03	00	2	CD	0	A
1 2 3	4 5 6	7	8 9	10 11	12	13	14	15 16	17 18	19 20	21 22	23	26 27	28	29

1 2 3 Code title

AEW Dual displacement open circuit piston pump

4 5 6 Displacement

080 80.0 cm^3/r [4.88 in^3/r]

7 Input shaft rotation

L Left-hand rotation (ccw) left side suction port, right side pressure port

R Right-hand rotation (cw) right side suction port, left side pressure port

8 9 Front mounting & input shaft

01 2 bolt B (SAE J744-101-2) with 13 tooth 16/32 spline (ANSI B92.1-1996 mod.), shaft extension 41,1 [1.62]

02 2 bolt B (SAE J744-101-2) with 14 tooth 12/24 spline (ANSI B92.1-1996 mod.), shaft extension 55, 5 [2.19]

03 2 bolt B (SAE J744-101-2) with 15 tooth 16/32 spline (ANSI B92.1-1996 mod.), shaft extension 46 [1.81]

04 2/4 bolt C (SAE J744-127-2/4) with 14 tooth 12/24 spline (ANSI B92.1-1996 mod.), shaft extension 55,5 [2.19]

05 2/4 bolt C (SAE J744-127-2/4) with 31, 8 [1.25] DIA straight keyed shaft (key included), 55, 5 [2.19] shaft extension

10 11 Main ports size & location

AA Rear ports; suction - 2.00 4-bolt split flange port standard pressure series (code 61) with M12 x 1.75 thread; pressure - 1.00 4-bolt split flange port standard pressure series (code 61) with M10 x 1.5 thread

AB Side ports; suction - 2.00 4-bolt split flange port standard pressure series (code 61); with M12 x 1.75 thread; pressure - 1.00 4-bolt split flange port standard pressure series (code 61) with M10 x 1.5 thread

AC Rear ports; suction - 2.00 SAE J518 4-bolt flange port standard pressure series (code 61); pressure - 1.00 SAE J518 4-bolt split flange

AD Side ports; suction - 2.00 SAE J518 4-bolt split flange port standard pressure series (code 61); pressure - 1.00 SAE J518 4-bolt split flange port standard pressure (code 61)

12 Drain port size & location

1 M27 x 2 metric O-ring port - top
2 M27 x 2 metric O-ring port – bottom
3 G 3/4 (BSPP) per ISO 228 - top
4 1.0625-12 UNF-2B O-ring port - top
5 1.0625-12 UNF-2B O-ring port - bottom

13 Diagnostic pressure ports

0 No diagnostic pressure ports

1 M14 x 1.5 metric O-ring ports – suction and pressure ports - plugged (rear ports only)

2 M12 x 1.5 metric O-ring ports - suction and pressure ports – plugged

3 .5625-18 UNF-2b SAE O-ring ports – suction and pressure ports - plugged (rear ports only)

4 .4375-20 UNF-2b SAE O-ring ports – suction and pressure ports - plugged

14 Dual displacement controller

A DG4V-3-2AL-MUH7-60 valve with 24V DC, ISO 4400(DIN 43650) connector

15 16 Control special features

00 No control special features
0A Bleed down orifice

17 18 Maximum displacement setting

00 Full displacement
01 90% of full displacement
02 80% of full displacement
03 70% of full displacement
04 60% of full displacement
05 50% of full displacement

19 20 Minimum displacement

00 Full displacement setting
01 10% of full displacement
02 20% of full displacement
03 30% of full displacement
04 40% of full displacement
05 50% of full displacement

425 Piston Pump

Model code - dual displacement continued

For additional information please refer 420 Piston pump catalog E-PUPI-TM002-E4

AEW	080	R	04	AD	4	4	A	0A	00	03	00	2	CD	0	A
1 2 3	4 5 6	7	8 9	10 11	12	13	14	15 16	17 18	19 20	21 22	23	26 27	28	29

21 22 Auxiliary (rear) mount and output shaft

00	No auxiliary mouting features
AA	Dual SAE J744 flange 82-2 (2 bolt A); accepts 9T 16/32 spline with 31, 7 [1.25] shaft extension (no coupler required, aux. mount O-ring included)
AB	Dual SAE J744 flange 82-2 (2 bolt A); accepts 11T 16/32 spline with 31, 7 [1.25] shaft extension (coupler and aux. mount O-ring included)
AC	Dual SAE J744 flange 101-2 (2 bolt B); accepts 13T 16/32 spline with 41,2 (1.62) extension (coupler and aux. mount O-ring included)
AD	Dual SAE J744 flange 101-2 (2 bolt B); accepts 15T 16/32 spline with 46 [1.81] extension (coupler and aux. mount O-ring included)
AE	Dual SAE J744 flange 82-2 (2 bolt A); accepts 9T 16/32 spline with 31.7 [1.25] shaft extension (coupler and aux. mount O-ring included)
AF	Dual SAE J744 flange 101-2 (2 bolt B); 26 tooth 32/64 spline output shaft (coupler and aux. mount O-ring not included)
AG	Dual SAE J744 flange 82-2 (2 bolt A); accepts 13T 16/32 spline with 41, 2 [1.62] shaft extension (coupler and aux. mount O-ring included)

23 Shaft seal

0	No shaft seal
1	Standard polyacrylate shaft seal
2	Fluorocarbon rubber shaft seal
3	Nitrile shaft seal

24 25 Pump special features

00	No pump special features

26 27 Paint

00	No paint
CD	Blue primer per spec 209-13cd

28 Identification/Packaging

0	Mark Eaton product number and full model code on label

29 Design code

A	First design

For additional information please refer 420 Piston Pump catalog E-PUPI-TM002-E4

425 Piston Pump

Performance data

Pump family	Displacement (cc/rev)	Max speed (rpm)	Min speed (rpm)*	Nominal pressure (bar)	Peak pressure (bar)	Inertia (kg*cm²)
425	80	2200	0	210	250	58

* For details see speed-pressure performance curve

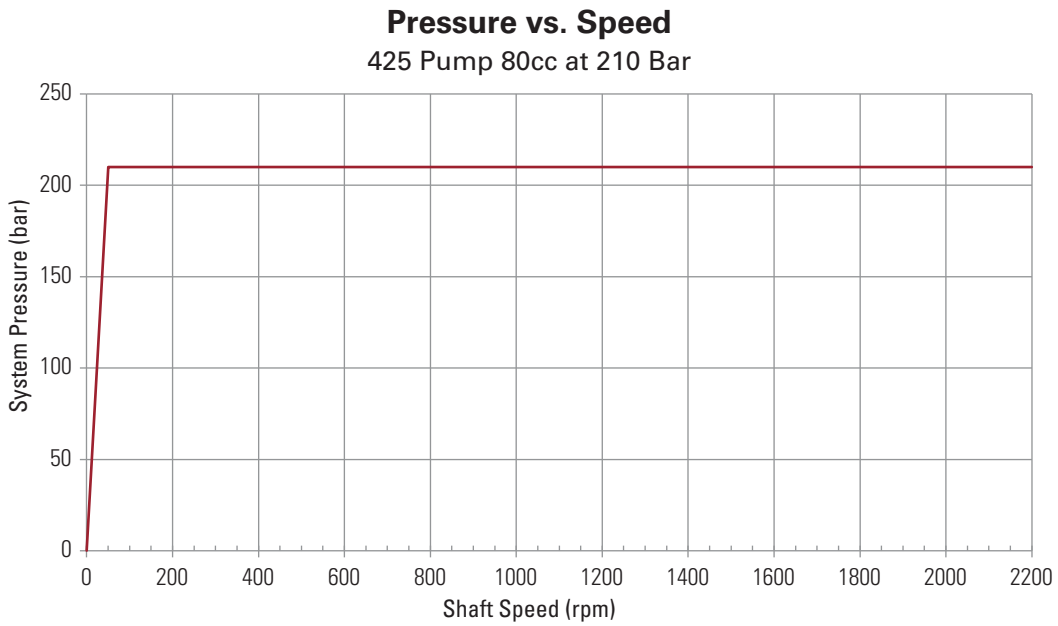

Mineral oil SAE 10W, oil temperature 49° C (120° F), 1 bar absolute inlet pressure.

425 pump dual-displacement control diagram

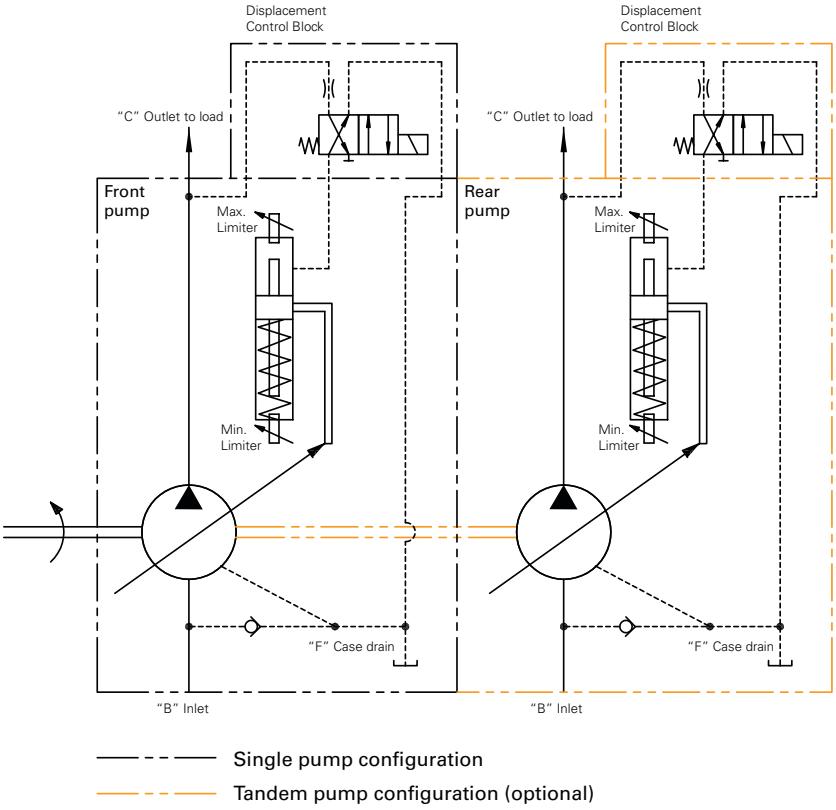

PVM Piston Pump

Model code

For additional information please refer PVM catalog #V-PUPI-TM007-E1

PVM	045	E	R	01	A	E	01	AA	A	28	00	00	0	0	A	0	A
1 2 3	4 5 6	7	8	9 10	11	12	13 14	15 16	17	18 19	20 21	22 23	24	25	26	27	28

1 2 3 Product series

PVM M series variable piston pump

4 5 6 Displacement

For details see the specifications on the next page

7 Valve plate

E Optimized for low sound, max speed 1800 rpm

M High speed version, max speed up to 2800 rpm

8 Input rotation

R Clockwise

L* Clockwise

9 10 Input shaft

Standard SAE and ISO splined versions (other configurations optional)

11 Mounting flange

Thirteen options in SAE and ISO mounts

12 Main port location

E** End ported

S*** Side ported

13 14 Main port type

SAE & ISO tube ports and 4-bolt flange (other configurations optional)

15 16 Pump special features

00 None

AA Adjustable maximum displacement stop and single shaft (standard)

AB Double shaft seal, two way

17 Control

0 None

A Pressure Compensator

B Pressure and flow compensator with bleed orifice

C Pressure and flow compensator with plugged orifice

E Industrial Control (57cc through 141cc only)

L Power control with load sense and pressure compensator with plugged orifice. (74 and 81cc only, other displacements 57 through 141cc under development)

18 19 Pressure compensator setting

00 None

07 70 bar (adjustable between 40 bar and 130 bar)

23 230 bar (adjustable between 130 bar and 320 bar)

28 280 bar (adjustable between 130 bar and 320 bar)

20 21 Flow compensator setting

00 None

11 11 bar setting

20 20-20 bar setting

24 24-24 bar setting

22 23 Torque limiter setting

00 None

50 50% of rated torque

(for any other values specify % of rated torque)

24 Compensator special features

0 None

25 Auxiliary mounting pad

0*** None

(Auxiliary mounting available on all frame sizes)

26 Paint

0 No Paint

A Standard Blue Paint

27 Customer identification

0 None (Contact Eaton for Options)

28 Design code

A A (Initial Release)

* Not available on 074, 081, 098 and 106 End Port

** Not available on 074, 081, 098 and 106 LH

*** Through drive not available on the LH

**** Not available on 018

PVM Piston Pump

Performance data

Pump family	Max speed Displacement (cc/rev)	Max speed "E" option (rpm)	"M" option (rpm)	Min speed* (rpm)	Nominal pressure (bar)	Peak pressure (bar)	Inertia (kg*cm²)
PVM	18	1800	2800	0	315	350	11.8
PVM	20	1800	2800	0	230	280	11.8
PVM	45	1800	2600	0	315	350	36.2
PVM	50	1800	2600	0	230	280	33.9
PVM	57	1800	2500	0	315	350	51.6
PVM	63	1800	2500	0	230	280	50.5
PVM	74	1800	2400	0	315	350	78.1
PVM	81	1800	2400	0	230	280	72.7
PVM	98	1800	2200	0	315	350	131.6
PVM	106	1800	2200	0	230	280	122.7
PVM	131	1800	2000	0	315	350	213.5
PVM	141	1800	2000	0	230	280	209.7

* For details see speed-pressure performance curve

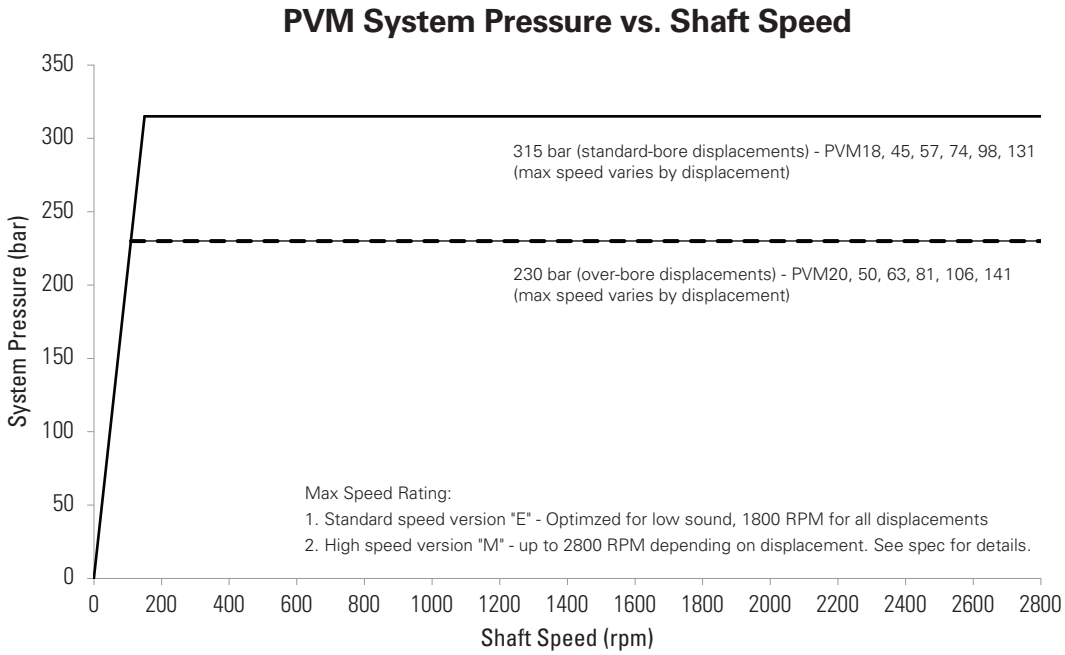

Test condition: Mineral oil SAE 10W, oil temperature 49° C (120° F), 1 bar absolute inlet pressure.

PF(V)X Piston Pump

Model code

For additonal details refer PF(V)X catalog #V-PUPI-TM004-E

P	*	X	*	–	*	*	*	M	*	*	*	*	*	*	1	*	*	*	S	V	*	A	#
1	2	3	4	5	6	7	8	9	10	11	12	13	14	15	16	17	18	19	20	21	22	23	24

1 Pump

P Open loop pumps

2 Displacement

F Fixed
V Variable

3 Pump series

X

4 Configuration

S Single unit
R Rear unit

5 Separator

6 7 8 Displacement cm³/r

066 66 cm³/r [4.0 in³/rev]
090 90 cm³/r [5.5 in³/rev]
130 130 cm³/r [7.9 in³/rev]
180 180 cm³/r [11.0 in³/rev]
250 250 cm³/r [15.3 in³/rev]

9 Basic standard

M Metric

10 11 Mounting flange

02 ISO 3019/2-125A2HW
04 ISO 3019/2-160A2HW
06 ISO 3019/2-200A2HW
See the original catalog for more details.

12 Rotation direction

R Right hand [CW]
L Left hand [CCW]
See the original catalog for more details.

13 Adjustment stops

0 No stop
4 Mechanical adjustment stop side A (PVX only)
5 Mechanical adjustment stop side B (PVX only)
6 Mechanical adjustment stops side A and B (PVX only)

Note:
4 is used as max. adjustment on side A
5 is used as min. adjustment stop side A
6 is the combination of 4 and 5 together

14 15 Thru-drive options

00 None
0A SAE A
0B SAE B
0C SAE C
0P Pilot pump (8cm³/r.) (PVX only)
See the original catalog for more details.

16 Main Ports

1 SAE ports - metric bolts

17 Main port orientation

A Axial (in-line rear)
R Radial (side ports)

18 19 Main drive shaft end

01 ISO straight key
02 ISO spline

20 Drive shaft seal configuration

S Single shaft seal

21 Seal material

V Viton

22 Yoke position indicator

0 No position indicator
V Visual position indicator
P Position sensor
M Sensor w/visual indicator

23 Surface finish

A Blue painted

24 Add control model code

See the original catalog for details.

PF(V)W Piston Pump

Model code

For additonal details refer PF(V)W catalog #V-PUPI-TM003-E

P	*	W	*	–	*	*	*	M	*	*	*	*	*	*	1	R	*	*	S	V	*	A	#
1	2	3	4	5	6	7	8	9	10	11	12	13	14	15	16	17	18	19	20	21	22	23	24

1 Pump

P Open loop pump

2 Displacement

F Fixed
V Variable

3 Pump series

W

4 Configuration

S Single unit
F Front unit
M Middle unit
R Rear unit

5 Separator

6 7 8 Displacement cm³/r

250 250 cm³/r [15.3 in³/rev]
360 360 cm³/r [22.0 in³/rev]
500 500 cm³/r [30.5 in³/rev]
750 750 cm³/r [45.8 in³/rev]

9 Basic standard

M Metric

10 11 Mounting flange

07 ISO 3019/2-200B4HW
08 ISO 3019/2-250B4HW
See the original catalog for more details.

12 Rotation direction

R Right hand [CW]
L Left hand [CCW]

13 Adjustment stops

0 No Stop
4 Mechanical adjustment stop side A (PVW only)
5 Mechanical adjustment stop side B (PVW only)
6 Mechanical adjustment stops side A and B (PVW only)

Note:
4 is used as max. adjustment on side A
5 is used as min. adjustment stop side A

14 15 Thru-drive options

00 None
0A SAE A
0B SAE B
0C SAE C
0D ISO125A2HW
0E ISO160A2HW
0F ISO125B4HW
0G ISO160B4HW
0H ISO200B4HW
0J ISO250B4HW
0P Pilot pump (8cm³/r.) (PVW only)
PP Double Pilot Pump (8 + 8 cm³/r.) (PVW only)
See the original catalog for more details.

16 Main Ports

1 SAE ports - metric bolts

17 Main port orientation

R Radial (side ports)

18 19 Main drive shaft end

01 ISO straight key
02 ISO spline

20 Drive shaft seal configuration

S Single shaft seal

21 Seal material

V Viton

22 Yoke position indicator

0 No position indicator
V Visual position indicator
P Position sensor
M Sensor with visual indicator

23 Surface Finish

A Blue Painted

24 Add Control Model Code

See the original catalog for details.

PF(V)X & PF(V)W Piston Pump

Performance data

Pump family	Displacement (cc/rev)	Max speed (rpm)	Min speed* (rpm)	Nominal pressure (bar)	Peak pressure (bar)	Inertia (kg*cm²)
PVX/PFX	66	1800	0	350	420	160
PVX/PFX	90	1800	0	350	420	160
PVX/PFX	130	1800	0	350	420	450
PVX/PFX	180	1800	0	350	420	450
PVX/PFX	250	1800	0	350	420	1,460
PVW/PFW	130	1800	0	350	420	450
PVW/PFW	180	1800	0	350	420	450
PVW/PFW	250	1800	0	350	420	1,460
PVW/PFW	360	1500	0	350	420	1,520
PVW/PFW	500	1800	0	350	420	5,000
PVW/PFW	750	1200	0	350	420	5,500

* To reach 350 bar, minimal speed required for X series is 150 rpm, and 80 rpm for W series.

VMQ Vane Pump

Model code - single and thru-drive pumps

For additional information please refer VMQ catalog #V-PUVN-TM001-E5

VMQ1	**	*	***	*	*	**	**	*	*	*	*	*	*	00	*	0	32
1 2 3 4	5 6	7	8 9 10	11	12	13 14	15 16	17	18	19	20	21	22	23 24	25	26	27 28

1 2 3 4 Series designation

VMQ1 Vane pump single series

5 6 Frame size

25 10-90 cm³/r (0.62-5.49 in³/r)
35 90-158 cm³/r (5.49-9.64 in³/r)
45 140-240 cm³/r (8.54-14.65 in³/r)

7 Valve plate

S Single
T Thru-drive

(Options at model codes 12 and 15 16 must be specified for thru-drive units)

8 9 10 Displacement

Frame size 25

010 10 cm³/r (0.62 in³/r)
016 16 cm³/r (0.98 in³/r)
020 20 cm³/r (1.23 in³/r
025 25 cm³/r (1.58 in³/r)
032 32 cm³/r (1.96 in³/r)
040 40 cm³/r (2.44 in³/r)
045 45 cm³/r (2.75 in³/r)
050 50 cm³/r (3.05 in³/r)
063 63 cm³/r (3.84 in³/r)
071 71 cm³/r (4.33 in³/r)
080 80 cm³/r (4.88 in³/r)
090 90 cm³/r (5.49 in³/r)

Frame size 35

090 90 cm³/r (5.49 in³/r)
100 100 cm³/r (6.10 in³/r)
112 112 cm³/r (6.83 in³/r)
125 125 cm³/r (7.63 in³/r)
135 135 cm³/r (8.24 in³/r)
140 140 cm³/r (8.54 in³/r)
158 158 cm³/r (9.64 in³/r)

Frame size 45

140 140 cm³/r (8.54 in³/r)
160 160 cm³/r (9.76 in³/r)
180 180 cm³/r (10.98 in³/r)
195 195 cm³/r (11.89 in³/r)
215 215 cm³/r (13.12 in³/r)
240 240 cm³/r (14.65 in³/r)

11 Front flange mounting style

A (Frame size 25 only) SAE B 2-bolt
101,60 (4.000) x 9,4 (0.37) pilot
14,4 (0.57) slots on 146,0 (5.75) bolt circle

B (All frame sizes)
SAE C 2-bolt
127,00 (5.000) x 12,4 (0.49) pilot
17,6 (0.69) slots on 181,0 (7.13) bolt circle

C (Frame size 25 only)
ISO 3019/2 100A2HW 2-bolt
100,00 (3.937) x 9,2 (0.36) pilot
14,1 (0.56) slots on 140,0 (5.51) bolt circle

D (Frame sizes 35 & 45 only)
ISO 3019/2 125A2HW 2-bolt
125,00 (4.921) x 9,2 (0.36) pilot
18,1 (0.71) slots on 180,0 (7.09) bolt circle

12 Rear mounting flange and orientation

Viewed from cover end of pump (Adapter end for thru-drive units, model code 7 = T)

0 None (non thru-drive) SAE A
A In-line with mounting flange (frame sizes 25 & 45)
B 90° to mounting flange (frame sizes 25 & 45)
C 45° CCW to mounting flange (frame size 35)
D 45° CW to mounting flange (frame size 35)SAE B
E In-line with mounting flange (frame sizes 25, 35 & 45)
F 90° to mounting flange (frame sizes 25 & 45)
G 45° CCW to mounting flange (frame size 35)
H 45° CW to mounting flange (frame size 35) SAE C
J In-line with mounting flange (frame sizes 35 & 45)
K 90° to mounting flange (frame size 35)
L 45° CCW to mounting flange (frame size 45)
M 45° CW to mounting flange (frame size 45)

VMQ Vane Pump

Model code - single and thru-drive pumps continued

For additional information please refer VMQ catalog #V-PUVN-TM001-E5

VMQ1	**	*	***	*	*	**	**	*	*	*	*	*	*	00	*	0	32
1 2 3 4	5 6	7	8 9 10	11	12	13 14	15 16	17	18	19	20	21	22	23 24	25	26	27 28

13 14 Input shaft type*

01 SAE J744 keyed
Frame size 25: 25,40 (1.000)
Frame size 35: 31,75 (1.250)
Frame size 45: 38,10 (1.500)

02 SAE J744 splined
Frame size 25: B-B
Frame size 35: C
Frame size 45: C-C

03 ISO 3019/2 keyed
Frame size 25: 25,00 (0.984)
Frame size 35: 32,00 (1.260)
Frame size 45: 40,00 (1.575)

05 SAE J744 keyed
Frame size 25: 31,75 (1.250)
Frame size 35: 38,10 (1.500)
Frame size 45: 44,45 (1.750)

06 SAE J744 splined
Frame size 25: C
Frame size 35: C-C
Frame size 45: D

07 ISO 3019/2 keyed
Frame size 25: 32,00 (1.260)
Frame size 35: 40,00 (1.575)

09 SAE J744 splined
Frame size 25: B
Frame size 45: C
(Not available on thru-drive units)

15 16 Output shaft coupling

Thru-drive units, model code 7 = T

00 None (non thru-drive)
16 SAE J744 16-4 A-spline shaft
22 SAE J744 22-4 B-spline shaft
25 SAE J744 25-4 B-B-spline shaft
32 SAE J744 32-4 C-spline shaft (frame sizes 35 & 45 only)

17 Inlet port type

A SAE J518 4-bolt split flange
B ISO 6162 4-bolt split flange

18 Outlet port type

A SAE J518 4-bolt flange
B ISO 6162 4-bolt flange

19 Outlet port type

Viewed from cover end of pump (Adapter end for thru-drive units)

A Opposite inlet port
B 90° CCW to inlet port
C In-line with inlet port
D 90° CW to inlet port

20 Shaft seal

A Single, primary
B Double, secondary (spring side out) Recommended for wet mount applications

21 Seal type

N Buna N
V Viton
W Buna N with Viton shaft seal(s)

22 Shaft rotation

Viewed from shaft end of pump

L Left hand (CCW)
R Right hand (CW)

23 24 Special features

00 None

25 Paint

0 None
A Blue

26 Customer identification

0 None

27 28 Design code

32 32 design
Installation dimensions remain unchanged for design numbers 30 to 39 inclusive.

VMQ Vane Pump

Model code - double pumps

For additional information please refer VMQ catalog #V-PUVN-TM001-E5

VMQ2	**	**	S	***	***	*	0	**	00	*	*	*	*	*	*	*	*	00	*	0	32
1 2 3 4	5 6	7 8	9	10 11 12	13 14 15	16	17	18 19	20 21	22	23	24	25	26	27	28	29	30 31	32	33	34 35

1 2 3 4 Series designation

VMQ2 Vane pump double series

5 6 Frame size (front section)

25 10-90 cm³/r (0.62-5.49 in³/r)
35 90-158 cm³/r (5.49-9.64 in³/r)
45 140-240 cm³/r (8.54-14.65 in³/r)

7 8 Frame size (rear section)

25 10-90 cm³/r (0.62-5.49 in³/r)
35 90-158 cm³/r (5.49-9.64 in³/r)

9 Pump type

S Standard

10 11 12 Displacement (front section)

Frame size 25
010 10 cm³/r (0.62 in³/r)
016 16 cm³/r (0.98 in³/r)
020 20 cm³/r (1.23 in³/r)
025 25 cm³/r (1.58 in³/r)
032 32 cm³/r (1.96 in³/r)
040 40 cm³/r (2.44 in³/r)
045 45 cm³/r (2.75 in³/r)
050 50 cm³/r (3.05 in³/r)
063 63 cm³/r (3.84 in³/r)
071 71 cm³/r (4.33 in³/r)
080 80 cm³/r (4.88 in³/r)
090 90 cm³/r (5.49 in³/r)

Frame size 35
090 90 cm³/r (5.49 in³/r)
100 100 cm³/r (6.10 in³/r)
112 112 cm³/r (6.83 in³/r)
125 125 cm³/r (7.63 in³/r)
135 135 cm³/r (8.24 in³/r)
140 140 cm³/r (8.54 in³/r)
158 158 cm³/r (9.64 in³/r)

Frame size 45
140 140 cm³/r (8.54 in³/r)
160 160 cm³/r (9.76 in³/r)
180 180 cm³/r (10.98 in³/r)
195 195 cm³/r (11.89 in³/r)
215 215 cm³/r (13.12 in³/r)
240 240 cm³/r (14.65 in³/r)

13 14 15 Displacement (rear section)

Frame size 25
010 10 cm³/r (0.62 in³/r)
016 16 cm³/r (0.98 in³/r)
020 20 cm³/r (1.23 in³/r)
025 25 cm³/r (1.58 in³/r)
032 32 cm³/r (1.96 in³/r)
040 40 cm³/r (2.44 in³/r)
045 45 cm³/r (2.75 in³/r)
050 50 cm³/r (3.05 in³/r)
063 63 cm³/r (3.84 in³/r)
071 71 cm³/r (4.33 in³/r)
080 80 cm³/r (4.88 in³/r)
090 90 cm³/r (5.49 in³/r)

Frame size 35
090 90 cm³/r (5.49 in³/r)
100 100 cm³/r (6.10 in³/r)
112 112 cm³/r (6.83 in³/r)
125 125 cm³/r (7.63 in³/r)
135 135 cm³/r (8.24 in³/r)
140 140 cm³/r (8.54 in³/r)
158 158 cm³/r (9.64 in³/r)

16 Front flange mounting style

A (Frame size 25 only)
SAE B 2-bolt
101,60 (4.000) x 9,4 (0.37) pilot
14,4 (0.57) slots on 146,0 (5.75) bolt circle

B (All frame sizes)
SAE C 2-bolt
127,00 (5.000) x 12,4 (0.49) pilot
17,6 (0.69) slots on 181,0 (7.13) bolt circle

C (Frame size 25 only)
ISO 3019/2 100A2HW 2-bolt
100,00 (3.937) x 9,2 (0.36) pilot
14,1 (0.56) slots on 140,0 (5.51) bolt circle

D (Frame sizes 35 & 45 only)
ISO 3019/2 125A2HW 2-bolt
125,00 (4.921) x 9,2 (0.36) pilot
18,1 (0.71) slots on 180,0 (7.09) bolt circle

17 Adapter flange

0 None (standard double pump)

VMQ Vane Pump

Model code - double pumps continued

For additional information please refer VMQ catalog #V-PUVN-TM001-E5

VMQ2	**	**	S	***	***	*	0	**	00	*	*	*	*	*	*	*	*	00	*	0	32
1 2 3 4	5 6	7 8	9	10 11 12	13 14 15	16	17	18 19	20 21	22	23	24	25	26	27	28	29	30 31	32	33	34 35

18 19 Input shaft type*

01 SAE J744 keyed
Frame size 25: 25,40 (1.000)
Frame size 35: 31,75 (1.250)
Frame size 45: 38,10 (1.500)

02 SAE J744 splined
Frame size 25: B-B
Frame size 35: C
Frame size 45: C-C

03 ISO 3019/2 keyed
Frame size 25: 25,00 (0.984)
Frame size 35: 32,00 (1.260)
Frame size 45: 40,00 (1.575)

05 SAE J744 keyed
Frame size 25: 31,75 (1.250)
Frame size 35: 38,10 (1.500)
Frame size 45: 44,45 (1.750)

06 SAE J744 Splined
Frame size 25: C
Frame size 35: C-C
Frame size 45: D

07 ISO 3019/2 Keyed
Frame size 25: 32,00 (1.260)
Frame size 35: 40,00 (1.575)

09 SAE J744 Spline
Frame size 25:B
Frame size 45°C

20 21 Output shaft coupling

00 None (standard double pump)

22 Inlet port type

A SAE J518 4-split flange
B ISO 6162 4-bolt flange

23 Front outlet port type

A SAE J518 4-bolt flange
B ISO 6162 4-bolt flange

24 Rear outlet port type

A SAE J518 4-bolt flange
B ISO 6162 4-bolt flange

25 Front outlet port position

Viewed from w end of pump

A Opposite inlet port
B 90° CCW to inlet port
C In-line with front inlet port
D 90° CW to inlet port

26 Rear outlet port position

Viewed from cover end of pump

352525 units

A 135° CCW to inlet port
B 45° CCW to inlet port
C 45° CW to inlet port
D 135° CW to inlet port

453525 units

E Opposite inlet port
F 90° CCW to inlet port
G In-line with inlet port
H 90° CW to inlet port

27 Shaft seal

A Single, primary
B Double, secondary (spring side out) recommended for wet mount applications

28 Shaft seal

N Buna N
V Viton
W Buna N with Viton shaft seal(s)

29 Shaft rotation

Viewed from shaft end of pump

L Left hand (CCW)
R Right hand (CW)

30 31 Special features

00 None

32 Paint

O None
A Blue

33 Customer identification

O None

34 35 Design code

32 design
Installation dimensions remain unchanged for design numbers 30 to 39 inclusive.

VMQ Vane Pump

Model code - triple pumps

For additional information please refer VMQ catalog #V-PUVN-TM001-E5

VMQ3	**	**	25	***	***	***	*	**	*	*	*	*	*	*	*	00	*	0	32
1 2 3 4	5 6	7 8	9 10	11 12 13	14 15 16	17 18 19	20	21 22	23	24	25	26	27	28	29	30 31	32	33	34 35

1 2 3 4 Series designation

VMQ3 Vane pump triple series

5 6 Frame size (front section)

35 90-158 cm³/r (5.49-9.64 in³/r)
(Compatible with 25 middle section frame size below)

45 140-240 cm³/r (8.54-14.65 in³/r)
(Compatible with 35 middle section frame size below)

7 8 Frame size (middle section)

25 10-90 cm³/r (0.62-5.49 in³/r)
35 90-158 cm³/r (5.49-9.64 in³/r)

9 10 Frame size (rear section)

25 10-90 cm³/r (0.62-5.49 in³/r)

11 12 13 Displacement (front section)

Frame size 35
090 90 cm³/r (5.49 in³/r)
100 100 cm³/r (6.10 in³/r)
112 112 cm³/r (6.83 in³/r)
125 125 cm³/r (7.63 in³/r)
135 135 cm³/r (8.24 in³/r)
140 140 cm³/r (8.54 in³/r)
158 158 cm³/r (9.64 in³/r)

Frame size 45
140 140 cm³/r (8.54 in³/r)
160 160 cm³/r (9.76 in³/r)
180 180 cm³/r (10.98 in³/r)
195 195 cm³/r (11.89 in³/r)
215 215 cm³/r (13.12 in³/r)
240 240 cm³/r (14.65 in³/r)

14 15 16 Displacement (middle section)

Frame size 25
010 10 cm³/r (0.62 in³/r)
016 16 cm³/r (0.98 in³/r)
020 20 cm³/r (1.23 in³/r)
025 25 cm³/r (1.58 in³/r)
032 32 cm³/r (1.96 in³/r)
040 40 cm³/r (2.44 in³/r)
045 45 cm³/r (2.75 in³/r)
050 50 cm³/r (3.05 in³/r)
063 63 cm³/r (3.84 in³/r)
071 71 cm³/r (4.33 in³/r)
080 80 cm³/r (4.88 in³/r)
090 90 cm³/r (5.49 in³/r)

Frame size 35
090 90 cm³/r (5.49 in³/r)
100 100 cm³/r (6.10 in³/r)
112 112 cm³/r (6.83 in³/r)
125 125 cm³/r (7.63 in³/r)
135 135 cm³/r (8.24 in³/r)
140 140 cm³/r (8.54 in³/r)
158 158 cm³/r (9.64 in³/r)

17 18 19 Displacement (rear section)

Frame size 25
010 10 cm³/r (0.62 in³/r)
016 16 cm³/r (0.98 in³/r)
020 20 cm³/r (1.23 in³/r)
025 25 cm³/r (1.58 in³/r)
032 32 cm³/r (1.96 in³/r)
040 40 cm³/r (2.44 in³/r)
045 45 cm³/r (2.75 in³/r)
050 50 cm³/r (3.05 in³/r)
063 63 cm³/r (3.84 in³/r)
071 71 cm³/r (4.33 in³/r)
080 80 cm³/r (4.88 in³/r)
090 90 cm³/r (5.49 in³/r)

20 Front flange mounting style

A SAE C 2-bolt
SAE J744 127-2
127,00 (5.000) x 12,4 (0.49) pilot
17,6 (0.69) slots on 181,0 (7.13) bolt circle

B ISO 3019/2 125A2HW 2-bolt
125,00 (4.921) x 9,2 (0.36) pilot
18,1 (0.71) slots on 180,0 (7.09) bolt circle

21 22 Input shaft type*

01 SAE J744 keyed
Frame size 35: 31,75 (1.250)
Frame size 45: 38,10 (1.500)

02 SAE J744 splined
Frame size 35: C
Frame size 45: C-C

03 ISO 3019/2 keyed
Frame size 35: 32,00 (1.260)
Frame size 45: 40,00 (1.575)

VMQ Vane Pump

Model code - triple pumps continued

For additional information please refer VMQ catalog #V-PUVN-TM001-E5

VMQ3	**	**	25	***	***	***	*	**	*	*	*	*	*	*	*	00	*	0	32
1 2 3 4	5 6	7 8	9 10	11 12 13	14 15 16	17 18 19	20	21 22	23	24	25	26	27	28	29	30 31	32	33	34 35

05 SAE J744 keyed
Frame size 35: 38,10 (1.500)
Frame size 45: 44,45 (1.750)

06 SAE J744 splined
Frame size 35: C-C
Frame size 45: D

07 ISO 3019/2 keyed
Frame size 35: 40,00 (1.575)

---

23 **Port type**

A Inlet: SAE J518 4-bolt flange
Front outlet: SAE J518 4-bolt flange
Middle outlet: SAE J518 4-bolt flange
Rear outlet: SAE J518 4-bolt flange

B Inlet: ISO 6162 4-bolt flange
Front outlet: ISO 6162 4-bolt flange
Middle outlet: ISO 6162 4-bolt flange
Rear outlet: ISO 6162 4-bolt flange

---

24 **Front outlet port position**

Viewed from cover end of pump

A Opposite inlet port
B 90° CCW to inlet port
C In-line with inlet port
D 90° CW to inlet port

---

25 **Middle outlet port position**

Viewed from cover end of pump

A Opposite inlet port
B 90° CCW to inlet port
C In-line with inlet port
D 90° CW to inlet port

---

26 **Rear outlet port position**

Viewed from cover end of pump

352525 units

A 135° CCW to inlet port
B 45° CCW to inlet port
C 45° CW to inlet port
D 135° CW to inlet port

453525 units

E Opposite inlet port
F 90° CCW to inlet port
G In-line with inlet port
H 90° CW to inlet port

---

27 **Shaft seal**

A Single, primary
B Double, secondary (spring side out)
Recommended for wet mount applications

---

28 **Seal type**

N Buna N
V Viton
W Buna N with Viton shaft seal(s)

---

29 **Shaft rotation**

Viewed from shaft end of pump

L Left hand (CCW)
R Right hand (CW)

---

30 31 **Special features**

00 None

---

32 **Paint**

0 None
A Blue

---

33 **Customer identification**

0 None

---

34 35 **Design code**

32 32 design
Installation dimensions remain unchanged for design numbers 31 to 39 inclusive.

VMQ Vane Pump

Performance data

Pump family	Displacement (cc/rev)	Max speed (rpm)	Min speed (rpm)	Nominal pressure (bar)	Inertia (kg*cm²)
25 VMQ	10	3000	200	290	7.5
25 VMQ	16	3000	200	290	7.5
25 VMQ	20	3000	200	290	7.5
25 VMQ	25	3000	200	290	7.5
25 VMQ	32	3000	200	290	7.5
25 VMQ	40	2600	200	290	10.3
25 VMQ	45	2600	200	290	10.3
25 VMQ	50	2600	200	290	10.3
25 VMQ	63	2600	200	290	10.3
25 VMQ	71	2600	200	290	10.3
25 VMQ	80	2600	200	290	10.3
25 VMQ	90	2200	200	260	10.3
35 VMQ	90	2400	200	260	24.9
35 VMQ	100	2400	200	260	24.9
35 VMQ	112	2400	200	260	24.9
35 VMQ	125	2400	200	260	24.9
35 VMQ	135	2200	200	260	24.9
35 VMQ	140	2200	200	220	24.9
35 VMQ	158	2200	200	220	24.9
45 VMQ	140	2200	200	260	24.9
45 VMQ	160	2200	200	260	24.9
45 VMQ	180	2200	200	260	24.9
45 VMQ	195	2200	200	260	24.9
45 VMQ	215	2200	200	220	24.9
45 VMQ	240	2200	200	70	24.9

VMQ Vane Pump

Performance data

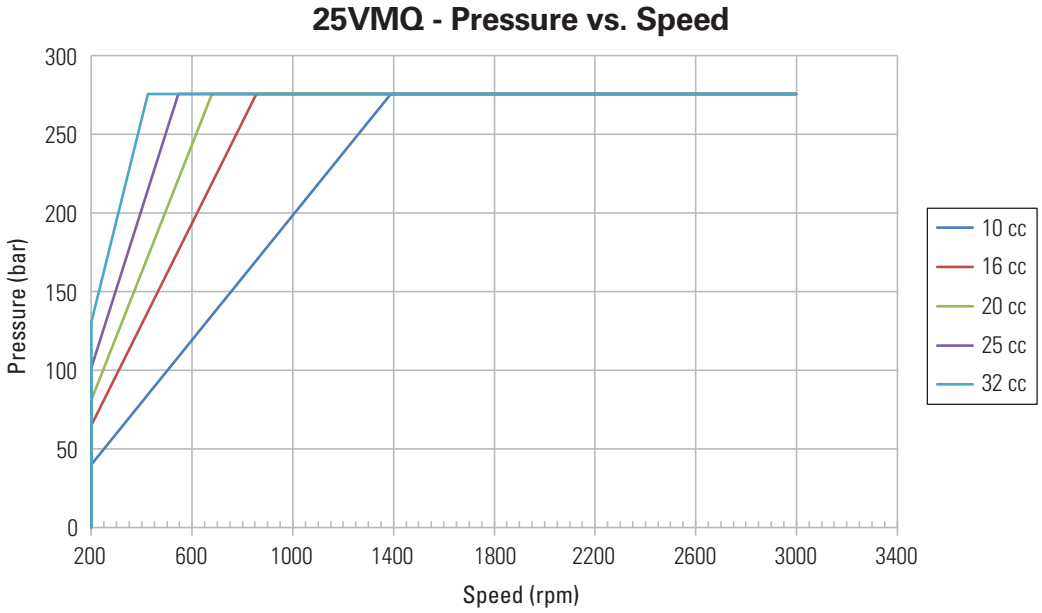

Mineral oil SAE 10W, oil temperature 49° C (120° F), 1 bar absolute inlet pressure.

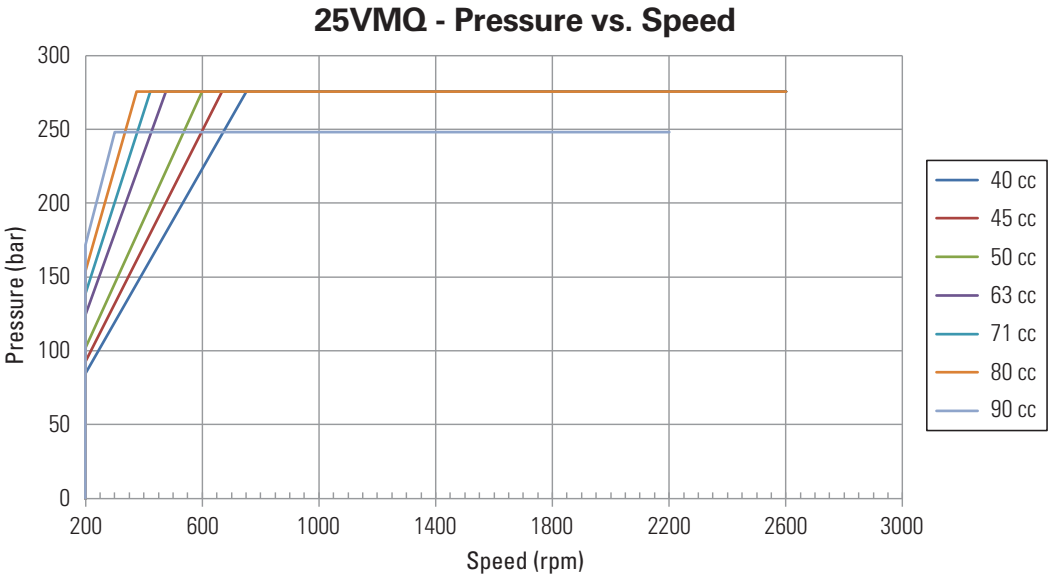

Mineral oil SAE 10W, oil temperature 49° C (120° F), 1 bar absolute inlet pressure.

VMQ Vane Pump

Performance data

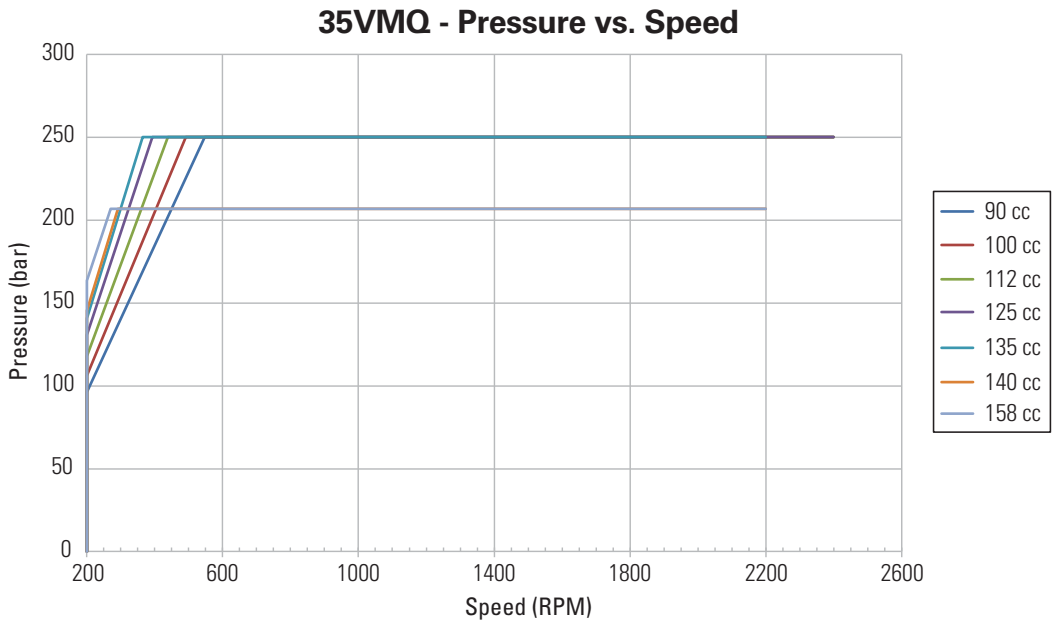

Mineral oil SAE 10W, oil temperature 49° C (120° F), 1 bar absolute inlet pressure.

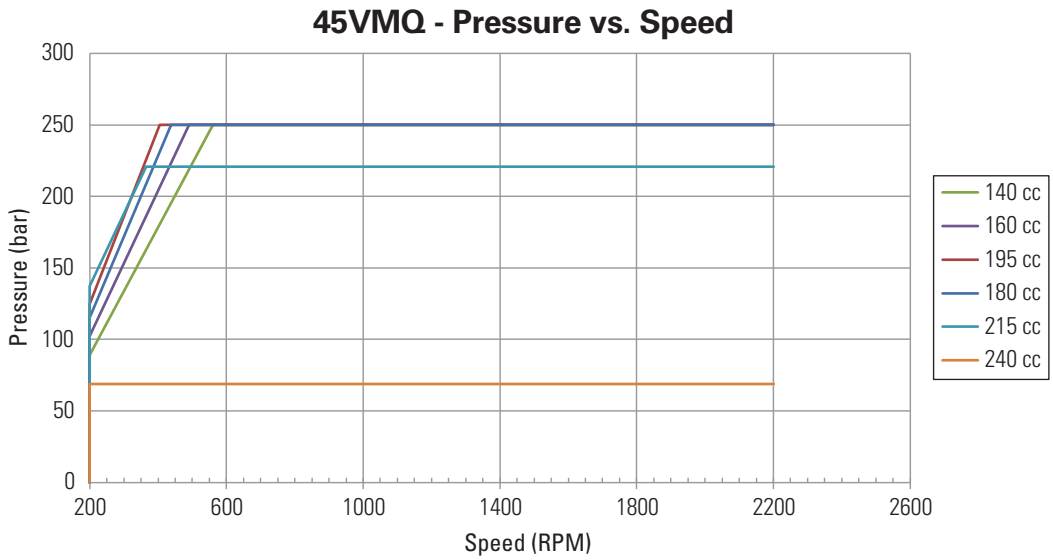

Mineral oil SAE 10W, oil temperature 49° C (120° F), 1 bar absolute inlet pressure.

V Series Vane Pump

Model code - single pump

For additional information please refer V series catalog #560

(F3) - **V M ** A (M) (F) - * * 22 * - *

1 2 3 4 5 6 7 8 9 10 11 12

1 F3 - Viton Seals

Omit if not required

2 Series designation

20V 7 to 45 cm³/r (0.43 to 2.78 in³/r)
25V 33 to 67 cm³/r (2.0 to 4.1 in³/r)
35V 81 to 121 cm³/r (4.9 to 7.4 in³/r)
45V 138 to 193 cm³/r (8.4 to 11.6 in³/r)

3 Pilot designation

Omit - Standard pilot
S SAE per ISO 3019/1 (SAE J744) (N/A on 20V pump)
M Metric per ISO 3019/2 100A2HW codes (N/A on 20V pump)

4 Geometric displacement

Rated capacity (USgpm) at 1200 rpm, 6,9 bar (100 psi)

Frame size	Code (USgpm)	cm³/r	in³/r
20V	2	7	0.43
	5	18	1.10
	8	27	1.67
	9	30	1.85
	11	36	2.22
	12	40	2.47
	14	45	2.78
25V	10	33	2.01
	12	39	2.47
	14	45	2.78
	17	55	3.39
	21	67	4.13
35V	25	81	4.94
	30	97	5.91
	35	112	6.83
	38	121	7.37
45V	42	138	8.41
	45	147	8.95
	50	162	9.85
	60	193	11.75

5 Port connections

A SAE 4-bolt flange

6 Port connection modifier

Omit Inch thread port connection (4-bolt flange)
M Metric port connection (4-bolt flange - N/A on 20V)

7 Mounting

Omit Flange mounting
F Foot mounting

8 Shafts

Std. Pilot Shafts

Model	Str key	HD Str. key	Spline
20V	1	N/A	151
25V thru 45V	1	86	11

"S" SAE Pilot & "M" Metric ISO Pilot Shafts

Model	Str key	HD Str. key	Metric Str. key	Spline
25VS - 45VS	202	203	N/A	297
25VM - 45VM	N/A	N/A	292N	N/A

9 Outlet postions

(Viewed from cover end of pump)
A Opposite inlet port
B 90° CCW from inlet
C Inline with inlet
D 90° CW from inlet

10 Design

11 Rotation

(Viewed form shaft end of pump)
L Left hand for counterclockwise
R Right hand for clockwise

Note: For options other than listed in the model code, i.e. shafts, ports, displacements and mountings, contact your Eaton representative.

V Series Vane Pump

Model code - double pump

For additional information please refer V series catalog #560

(F3)	-	****V	M	**	A	(M)	**	(F)	-	*	**	22	*	-	***
1		2	3	4	5	6	7	8		9	10	11	12		13

1 F3 - viton seals

Omit if not required

2 Series designation

Displacements cm³/r (in³/r)

Model	Shaft End	Cover End
2520V	(2.0 - 4.1)	33 - 67
	(0.45 - 2.8)	7 - 45
2525V	(2.0 - 4.1)	33 - 67
	(0.45 - 2.8)	33 - 67
3520V	(2.0 - 4.1)	81 - 121
	(2.0 - 4.1)	7 - 45
3525V	(4.9 - 7.4)	81 - 121
	(0.45 - 2.2)	33 - 67
4520V	(4.9 - 7.4)	138 - 193
	(2.0 - 4.1)	7 - 45
4525V	(8.4 - 11.8)	138 - 193
	(0.45 - 2.2)	33 - 67
4535V	(8.4 - 11.8)	138 - 193
	(2.0 - 4.1)	81 - 121
	(8.4 - 11.8)	(4.9 - 7.4)

3 Pilot designation

Omit	Standard pilot
S	SAE per ISO 3019/1 (SAE J744) (N/A on 2525V)
M	Metric per ISO 3019/2 100A2HW (N/A on 2525V)

4 Geometric displacement - shaft end pump

Rated capacity (USgpm) at 1200 rpm, 6,9 bar (100 psi)

Frame size	Code (USgpm)	cm³/r	in³/r
25**V	10	33	2.0
	12	40	2.5
	14	45	2.8
	17	55	3.4
	21	67	4.1
35**V	25	81	4.9
	30	97	5.9
	35	112	6.8
	38	121	7.4
45**V	42	138	8.4
	45	147	9.0
	50	162	9.9
	60	193	11.8

5 Port connections

A	SAE 4-bolt flange

6 Port connection modifier

Omit	Inch thread port connection (4-bolt flange)
M	Metric port connection (4-bolt flange)

7 Geometric displacement - cover end pump

Rated capacity (USgpm) at 1200 rpm, 6,9 bar (100 psi)

Frame size	Code (USgpm)	cm³/r	in³/r
**20V	2	7	0.43
	5	18	1.1
	8	27	1.7
	9	30	1.9
	11	36	2.2
	12	40	2.5
	14	45	2.8
**25V	10	33	2.0
	12	40	2.5
	14	45	2.8
	17	55	3.4
	21	67	4.1
4535V	25	81	4.9
	30	97	5.9
	35	112	6.8
	38	121	7.4

8 Mounting

Omit	Flange mounting
F	Foot mounting

9 Shaft

Std. Pilot Shafts

Model	Str key	HD Str. key	Spline
25**V - 45**V	1	N/A	151

"S" SAE Pilot & "M" Metric ISO Pilot Shafts

Model	Str key	HD Str. key	Metric Str. key	Spline
25**VS - 45**VS	202	203	N/A	297
25**VM - 45**VM	N/A	N/A	292N	N/A

V Series Vane Pump

Model code - double pump continued

For additional information please refer V series catalog #560

(F3)	-	****V	M	**	A	(M)	**	(F)	-	*	**	22	*	-	***
1		2	3	4	5	6	7	8		9	10	11	12		13

10 Port orientation

(Viewed from cover end of pump)

All series except 2525V & 4535V with No. 1 outlet opposite inlet:

AA No. 2 outlet 135 CCW from inlet
AB No. 2 outlet 45 CCW from inlet
AC No. 2 outlet 45 CW from inlet
AD No. 2 outlet 135 CW from inlet

With No.1 outlet 90 CCW from inlet:

BA No. 2 outlet 135 CCW from inlet
BB No. 2 outlet 45 CCW from inlet
BC No. 2 outlet 45 CW from inlet
BD No. 2 outlet 135 CW from inlet

With No.1 outlet inline with inlet:

CA No. 2 outlet 135 CCW from inlet
CB No. 2 outlet 45 CCW from inlet
CC No. 2 outlet 45 CW from inlet
CD No. 2 outlet 135 CW from inlet

With No.1 outlet 90 CW from inlet:

DA No. 2 outlet 135 CCW from inlet
DB No. 2 outlet 45 CCW from inlet
DC No. 2 outlet 45 CW from inlet
DD No. 2 outlet 135 CW from inlet

Series 2525V & 4535V

With No.1 outlet opposite inlet:

AA No. 2 outlet opposite inlet
AB No. 2 outlet 90 CCW from inlet
AC No. 2 outlet inline with inlet
AD No. 2 outlet 90 CW from inlet

With No.1 outlet 90 CCW from inlet:

BA No. 2 outlet opposite inlet
BB No. 2 outlet 90 CCW from inlet
BC No. 2 outlet inline with inlet
BD No. 2 outlet 90 CW from inlet

With No.1 outlet inline with inlet:

CA No. 2 outlet opposite inlet
CB No. 2 outlet 90 CCW from inlet
CC No. 2 outlet inline inlet
CD No. 2 outlet 90 CW from inlet

With No.1 outlet 90 CW from inlet:

DA No. 2 outlet opposite inlet
DB No. 2 outlet 90 CCW from inlet
DC No. 2 outlet inline with inlet
DD No. 2 outlet 90 CW from inlet

11 Design

12 Rotation

(Viewed form shaft end of pump)

L Left hand for counter clockwise
R Right hand for clockwise

Note: For options other than listed in the model code, i.e. shafts, ports, displacements and mountings, contact your Eaton representative.

V Series Vane Pump

Model code - thru-drive pump

For additional information please refer V series catalog #560

(F3) - **VT * S ** A (M) - 2 * * * 22 *

1 2 3 4 5 5 7 8 9 10 11 12 13

1 F3 - viton seals

Omit if not required

2 Series designation

25VT 33 to 67 cm³/r (2.0 to 4.1 in³/r)
35VT 81 to 121 cm³/r (4.9 to 7.4 in³/r)
45VT 138 to 193 cm³/r (8.4 to 11.8 in³/r)

3 Rear pump mounting

SAE (ISO 3019/1) 2-bolt

A SAE "A"
B SAE "B"
C SAE "C" (35VT & 45VT only)
BP SAE "B" to mount PVE12/19/21 piston pump

4 Pilot designation

M Metric per ISO 3019/2 100A2HW
S Standard pilot per ISO 3019/1 (SAE J744)

5 Geometric displacement

Rated capacity (USgpm) at 1200 rpm, 6,9 bar (100 psi)

Frame size	Code (USgpm)	cm³/r	in³/r
25VT	10	33	2.01
	12	40	2.47
	14	45	2.78
	17	55	3.39
	21	67	4.13
35VT	25	81	4.94
	30	97	5.91
	35	112	6.83
	38	121	7.37
45VT	42	138	8.41
	45	147	8.95
	50	162	9.85
	60	193	11.75

6 Port connections

A SAE 4-bolt flange

7 Port connection modifier

Omit Inch thread port connection (4-bolt flange)
M Metric port connection (4-bolt flange - N/A on 20V)

8 Thru-drive coupling

2 Coupling with pump (included)

Pump series	Tail shaft pump Requirements
**VTA	SAE "A" size w/30&#2; involute spline, 9T 16/32 D.P
**VTB	SAE "B" size w/30&#2; involute spline, 13T 16/32 D.P
**VTC	SAE "C" size w/30&#2; involute spline, 14T 12/24 D.P

9 Shaft

Model	SAE Str. key	ISO Str. key	SAE spline	HD Str. key
225VT	202	292N	297	203
35VT	N/A	292N	297	203
45VT	N/A	292N	297	203

10 Outlet postions

(Viewed from cover end of pump)

A Opposite inlet port
B 90° CCW from inlet
C Inline with inlet
D 90° CW from inlet

11 Thru-drive adapter orientation

(Viewed form shaft end of pump)

SAE - A Adaptor

A Rotate 45° CW with respect to pump mounting flange
B Rotate 45° CCW with respect to pump mounting flange

SAE - B, BP or C adaptor

A Inline with pump mounting flange
B Rotate 90 with respect to pump mounting flange

12 Design

13 Rotation

(Viewed form shaft end of pump)

L Left hand for counterclockwise
R Right hand for clockwise

Note: For options other than listed in the model code, i.e. shafts, ports, displacements and mountings, contact your Eaton representative.

V Series Vane Pump

Performance data

Pump family	Displacement (cc/rev)	Max speed (rpm)	Min speed (rpm)	Nominal pressure (bar)	Inertia (kg*cm²)
20 V	7	1800	500	140	2.0
20 V	18	1800	200	210	2.0
20 V	27	1800	200	210	2.0
20 V	30	1800	200	210	2.0
20 V	36	1800	200	210	2.7
20 V	40	1800	200	160	2.7
20 V	45	1800	200	140	2.7
25 V	33	1800	200	170	6.8
25 V	40	1800	200	170	6.8
25 V	45	1800	200	170	6.8
25 V	55	1800	200	170	6.8
25 V	67	1800	200	170	6.8
35 V	81	1800	200	170	14.0
35 V	97	1800	200	170	14.0
35 V	112	1800	200	170	14.0
35 V	121	1800	200	170	14.0
45 V	138	1800	200	170	30.7
45 V	147	1800	200	170	30.7
45 V	162	1800	200	170	30.7
45 V	193	1800	200	170	30.7

V Series Vane Pump

Performance data

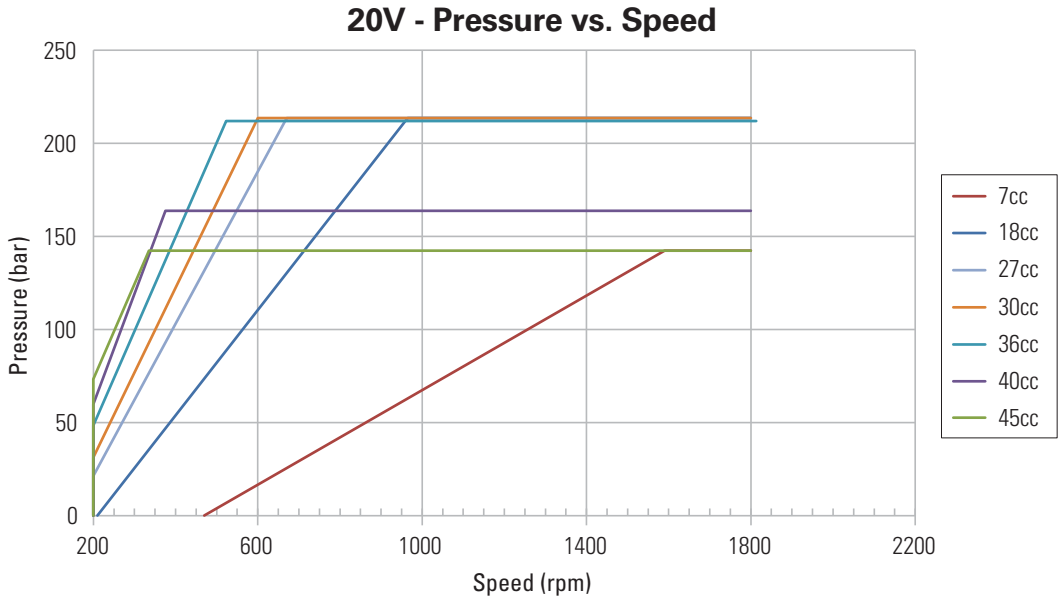

Mineral oil SAE 10W, oil temperature 49° C (120° F), 1 bar absolute inlet pressure.

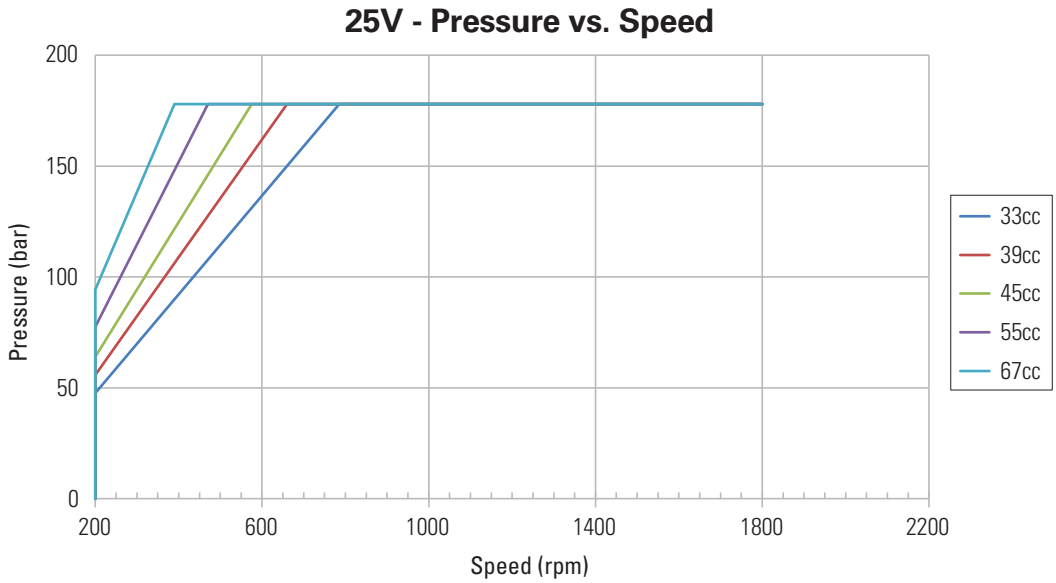

Mineral oil SAE 10W, oil temperature 49° C (120° F), 1 bar absolute inlet pressure.

V Series Vane Pump

Performance data

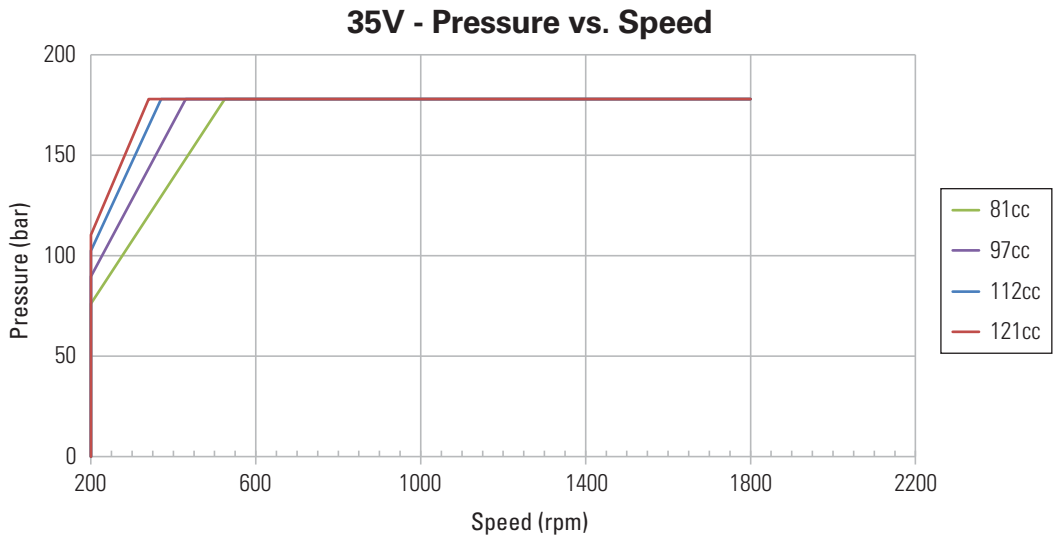

Mineral oil SAE 10W, oil temperature 49° C (120° F), 1 bar absolute inlet pressure.

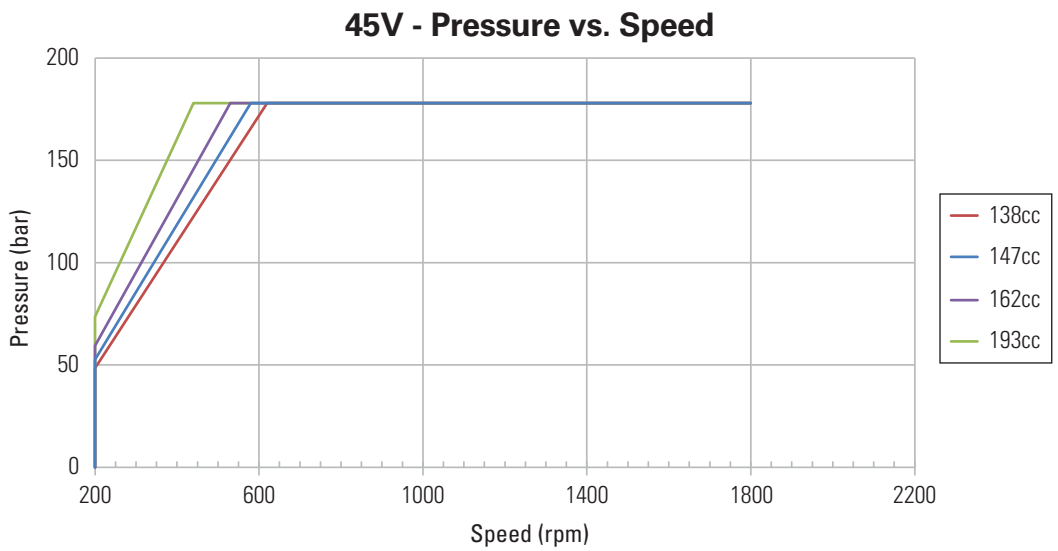

Mineral oil SAE 10W, oil temperature 49° C (120° F), 1 bar absolute inlet pressure.

V10 & V20 Vane Pump

Model code - single pump

For additional information please refer V10 & V20 catalog #698

(F3) - V 10 - 1 P 5 S - 1 C 20 L

1 2 3 4 5 6 7 8 9 10 11

1 Special seals

Omit if not required.

2 Vane pump

3 Series

10 or 20

4 Mounting

1	2-bolt flange, 3.25" pilot (standard)
6	2-bolt flange, 4.00" pilot (optional)

5 Inlet port connections

P	1" NPT thread (V10 only)
	1 1/4" NPT thread (V20 only)
S	1.3125-12 straight thread (V10 only)
	1.625-12 straight thread (V20 only)

6 Ring size

(Delivery at 1200 r/min and 100 psi)

V10 series

1	1 USgpm
2	2 USgpm
3	3 USgpm
4	4 USgpm
5	5 USgpm
6	6 USgpm
7	7 USgpm

V20 series

6	6 USgpm
7	7 USgpm
8	8 USgpm
9	9 USgpm
11	11 USgpm
12	12 USgpm
13	13 USgpm

7 Outlet port connections

P	1/2" NPT thd. (V10 only)
R	1.1875–12 St. thd. (V20 only)
S	.750–16 St. thd. (V10 only)
	1.0625–12 St. thd. (V20 only)

8 Shafts

1	Straight keyed
11	Splined
38	11 Tooth – 3/4" OD
62	Splined (V20 only)

9 Position of outlet port

(Viewed from cover end of pump)

A	Opposite inlet port
B	90 CCW from inlet
C	In line with inlet
D	90 CW from inlet

10 Design

11	V20 series
20	V10 series

Subject to change

11 Shaft rotation

(Viewed form shaft end of pump)

L	Left hand (counterclockwise)

Omit for right hand

V10 & V20 Vane Pump

Model code - double pump

For additional information please refer V10 & V20 catalog #698

(F3)	-	V	2010	-	1	F	13	S	3	S	-	1	CC	-	12	-	L
1		2	3		4	5	6	7	8	9		10	11		12		13

1 Special seals

Omit if not required.

2 Vane pump

3 Series

2010 or 2020

4 Mounting

1	2-bolt flange, 4.00" pilot (standard)
6	2-bolt flange, 3.25" pilot (optional)

5 Inlet port connections

F	4-bolt flange	1.50 dia. (V2010) 2.00 dia. (V2020)

6 Shaft-end pump ring size

(Delivery at 1200 rpm & 100 psi)

6	6 USgpm
8	8 USgpm
9	9 USgpm
11	11 USgpm
12	12 USgpm
13	13 USgpm

7 No. 1 outlet port (shaft end)

S	1.062-12 UN-2B thd.

8 Cover-end pump ring size

(Delivery at 1200 r/inm and 100 psi)

V2010

1	1 USgpm
2	2 USgpm
3	3 USgpm
4	4 USgpm
5	5 USgpm
6	6 USgpm
7	7 USgpm

V2020

6	6 USgpm
7	7 USgpm
8	8 USgpm
9	9 USgpm
11	11 USgpm

9 No. 2 outlet port (cover end)

S	.750-16 St. Thd. (V2010) 1.062–12 St. Thd. (V2020)

10 Shafts

1	Straight keyed
11	Splined

11 Position of outlet

(Viewed from cover end of pump)

V2010

With no. 1 outlet opposite inlet

AA	No. 2 outlet 135° CCW from inlet
AB	No. 2 outlet 45° CCW from inlet
AC	No. 2 outlet 45° CW from inlet
AD	No. 2 outlet 135° CW from inlet

With no. 1 outlet 90° CCW from inlet

BA	No. 2 outlet 135 CCW from inlet
BB	No. 2 outlet 45 CCW from inlet
BC	No. 2 outlet 45 CW from inlet
BD	No. 2 outlet 135 CW from inlet

With no. 1 outlet in line with inlet

CA	No. 2 outlet 135° CCW from inlet
CB	No. 2 outlet 45° CCW from inlet
CC	No. 2 outlet 45° CW from inlet
CD	No. 2 outlet 135° CW from inlet

With no. 1 outlet 90° CW from inlet

DA	No. 2 outlet 135° CCW from inlet
DB	No. 2 outlet 45° CCW from inlet
DC	No. 2 outlet 45° CW from inlet
DD	No. 2 outlet 135° CW from inlet

V2020

With no. 1 outlet opposite inlet

AA	No. 2 outlet opposite inlet
AB	No. 2 outlet 90° CCW from inlet
AC	No. 2 outlet in line with inlet
AD	No. 2 outlet 90° CW from inlet

With no. 1 outlet 90° CCW from inlet

BA	No. 2 outlet opposite inlet
BB	No. 2 outlet 90° CCW from inlet
BC	No. 2 outlet in line with inlet
BD	No. 2 outlet 90° CW from inlet

With no. 1 outlet inline with inlet

CA	No. 2 outlet opposite inlet
CB	No. 2 outlet 90° CCW from inlet
CC	No. 2 outlet in line with inlet
CD	No. 2 outlet 90° CW from inlet

V10 & V20 Vane Pump

Model code - double pump continued

For additional information please refer V10 & V20 catalog #698

(F3)	-	V	2010	-	1	F	13	S	3	S	-	1	CC	-	12	-	L
1		2	3		4	5	6	7	8	9		10	11		12		13

With no. 1 outlet 90° CW from inlet

DA No. 2 outlet opposite inlet

DB No. 2 outlet 90° CCW from inlet

DC No. 2 outlet in line with inlet

DD No. 2 outlet 90° CW from inlet

---

12 **Design**

12 V2010 series

30 V2020 series

Subject to change

---

13 **Shaft rotation**

(Viewed from shaft end of pump)

L Left hand for counterclockwise

Omit for right hand

V10 & V20 Vane Pump

Performance data

Pump family	Displacement (cc/rev)	Max speed (rpm)	Min speed (rpm)	Nominal pressure (bar)	Inertia (kg*cm²)
V10	3.3	4800	600	172	0.41
V10	6.6	4500	300	172	0.41
V10	9.8	4000	200	172	0.41
V10	13.1	3400	200	172	0.54
V10	16.4	3200	200	172	0.54
V10	19.5	3000	200	172	0.65
V10	22.8	2800	200	172	0.65
V20	19.5	3400	200	152	1.33
V20	22.8	3000	200	138	1.82
V20	26.5	2800	200	172	1.82
V20	29.7	2800	200	172	1.82
V20	36.4	2500	200	172	2.21
V20	39	2400	200	152	2.49
V20	42.4	2400	200	152	2.49

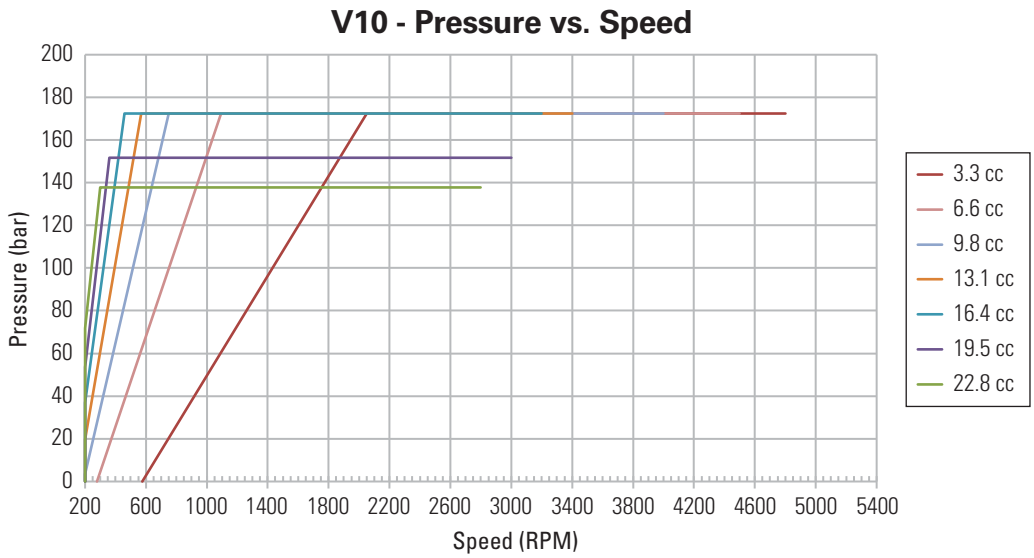

Mineral oil SAE 10W, oil temperature 49° C (120° F), 1 bar absolute inlet pressure.

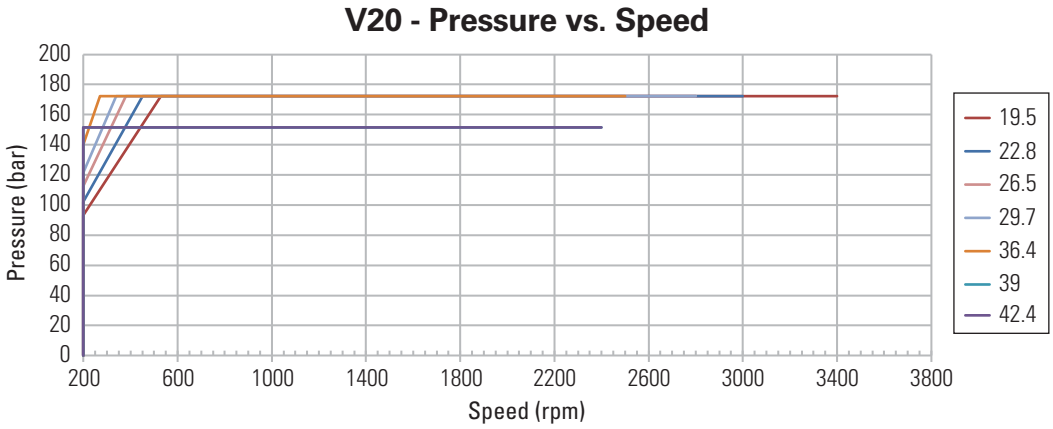

Mineral oil SAE 10W, oil temperature 49° C (120° F), 1 bar absolute inlet pressure.

Integrated Motor Pump

Introduction

For additonal details refer PF(V)W catalog #V-PUPI-TM003-E

The Eaton integrated motor pump is a unique combination of a conventional AC induction motor cooled with system hydraulic oil and a Eaton hydraulic pump, either fixed vane pump or variable piston type, housed in a special sound reduction enclosure.

This combination provides an exceptionally quiet and small pumping package for any industrial application requiring up to 125 horsepower (92 kilowatts) of continuous hydraulic power.

The package comes completely assembled, tested, and ready for installation. Circulating the hydraulic oil through the motor, bathing both the rotor and stator, makes it possible to obtain twice the normal continuous output power from the motor windings. Physical size reductions of 35% to 50% compared with conventional pumping packages are possible as a result. Normal operation of the motor is not affected by circulating oil through it, nor is the system's hydraulic oil damaged.

Heat generated within the electric motor is carried away by the hydraulic fluid and dissipated by the hydraulic cooling system. A motor fan is not needed, which makes it practical to cover the entire assembly (motor and pump) with a compact, polyethylene sound reduction enclosure. This reduces the sound from the pump as well as the motor, resulting in a noise level reduction that is unsurpassed in the industry. A complete line of standard Eaton pumps can be fitted to the integrated motor pump including single fixed vane pumps, single variable piston pumps, double vane pumps, double piston pumps or mixed vane and piston combinations.

Features & benefits

- Smaller package size because of oil cooled electric motor
- Heat generated by the electric motor is carried away by the hydraulic fluid
- 70% reduction in sound compared to conventional power unit systems (approximately 10 dBA)
- All external leakage points for both oil leaking out and air leaking in are sealed by static o-rings
- External leakage from dynamic shaft seals has been eliminated.
- The specially designed coupling connecting the pump and motor drive shafts is oil lubricated and factory installed by Eaton. This eliminates labor to align and install the coupling
- Only normal filtration practices are required
- Meets the requirements of International Standard IEC 34-5 (1991-01) for IP57 degrees of protection when installed using a sealed electrical conduit
- The electric motor stator components have UL recognition
- Motor bearings are continuously lubricated by hydraulic fluid
- System sound is significantly reduced by eliminating the fan and enclosing the motor and pump

Supporting literature

The following literature items can be found online at http://hydliterature.eaton.com/literature or ordered through your local Eaton Distributor.

- PVQ piston pumps
  V-PP-MC-0002-E
- PVM series piston pumps
  #V-PUPI-TM007-E1
- V series vane pumps
  #560
- V10 & V20 series vane pumps
  #698
- VMQ series vane pumps
  #V-PUVN-TM001-E5

Integrated Motor Pump

General information

Eaton oil-cooled motor pumps combine hydraulic and electrical technologies into a single package rated two times higher than conventional air-cooled motor units of the same size. Operating the electric motor at these higher levels results in a lighter weight, more compact unit for the same hydraulic power output. Because heat generated in the motor is carried away by the oil, it is possible to enclose the pump and motor, providing a total pumping package with unsurpassed low sound levels. Electrical supply equipment for the oil-cooled integrated motor pumps is identical to conventional air-cooled AC motors.

Components

Shroud

The acoustic shroud is made of durable polyethylene plastic, impervious to common industrial coolants and hydraulic fluids. The specially engineered material dampens sound.

Pumps

The integrated motor pump can be configured with a variety of Eaton pumps:

- Single and double variable piston pumps with load sensing or pressure compensating controls
- Single and double vane pumps
- Double pumps with one variable displacement piston pump and one fixed vane pump

Electrical Motor

- Inverter duty 1000:1, rated speed 1500/1800 rpm, min speed 30-200 rpm (pump dependent to meet 1 GPM flow needed for motor cooling), max speed 3600 rpm
- 10-125HP range
- 50Hz: 380V, 400V; 60Hz: 230V, 380V, 460V, 575

Cooling operation

Hydraulic oil, at low velocity, first flows through the electric motor, around the rotor, stator poles, and winding, removing heat. Oil then passes to the inlet of the pump, to the load, and through the hydraulic system. The cooling properties of oil (heat transfer coefficient and specific heat) are superior to those of air by a full order of magnitude. The integrated motor pump system can therefore maintain rotor and stator winding temperatures significantly lower than those in air-cooled motors, while raising the oil temperature only a few degrees from inlet to outlet.

Sound comparisons

The following chart illustrates the dramatic reduction in airborne noise provided by the integrated motor pump in typical power unit applications.

The integrated motor pump has very low sound levels, but it is necessary to design power units with proper sound reduction techniques such as isolation of the integrated motor pump from the power unit base, proper use of hose and tubing, and isolation of structural elements of the power unit which could amplify sound. Refer to Eaton literature #510, Noise Control in hydraulic systems, for design guidelines.

Port connections

Port sizes are available for a full range of flow rates:

Inlet:

ISO 6162 4-bolt - 63,5 mm (2.50”), 76,2 mm (3.00”) and 101,6 mm (4.00”) inlet ports are provided depending on pump selection (see page 64).

Outlet:

Pressure ports are ISO 6162 4-bolt flange. Case drain: SAE o-ring face seal (ORFS) connection.

Controls (load sensing):

SAE o-ring face seal (ORFS) connection. Eaton oil-cooled.

Footprint Comparisons for Identical Hydraulic Outputs

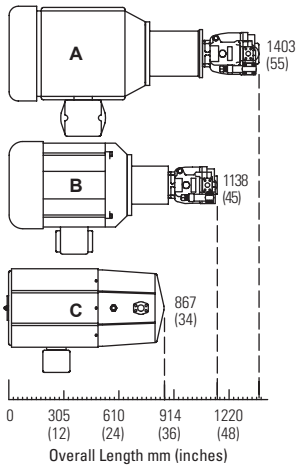

A Conventional 1200 rpm, 60 Hz 60 hp, air-cooled electric motor and PVM98 pump

B Conventional 1800 rpm, 60 Hz 60 hp, air-cooled electric motor and PVM57 pump

C Integrated Motor Pump 1800 rpm, 60 Hz 60 hp, oil-cooled electric motor and PVM57 pump

Integrated Motor Pump

General information

Application

The unit is delivered fully assembled and tested. There is no motor coupling or bellhousing requiring assembly.

The integrated motor pump uses a static o-ring sealed flange to eliminate any potential leakage.

Pump to motor alignment

The motor shaft on the integrated motor pump is machined with a spline. Pumps fitted to the motor are also supplied with splines. An internal splined coupling connects the motor to the pump.

Motor to pump coupling

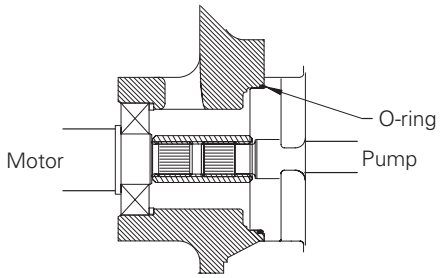

This coupling mechanism, used in conjunction with the machined mounting flange, provides for precise alignment of the pump to the motor. Vibration is minimized as a result.

If it becomes necessary to remove or replace a pump for any reason, precise alignment is achieved without the need to indicate shafts and separately align the pump to the motor.

The entire area around the splined coupling is bathed in oil and sealed by a static o-ring seal formed by the mounting flange and the pump itself. In addition, any minute shaft seal leakage from the pump stays within the sealed motor.

Inlet condition

Standard models require a positive inlet pressure, normally provided by using an overhead reservoir (Figure 1) or an "L" shaped reservoir (Figure 2) with its oil level up to the motor pump air bleed port connection. The maximum positive inlet pressure is 2 bar (29 psi). Eaton recommends a positive inlet pressure for all integrated motor pump installations.

Note: Prior to start-up, the electric motor should be filled with hydraulic fluid until the oil level reaches the air bleed connection as shown in Figures 1 and 2. This will ensure proper oil cooling of the stator winding.

If a positive inlet application is not feasible, "S5" suffix models are available (Figure 3) with the motor inlet connection at the top (12 o'clock) position of the end bell.

Fill the electric motor with hydraulic fluid as shown in Figure 3 below prior to making the inlet connection.

⚠ Caution

Do not attempt to lift or move this unit using the sound shroud. This could cause damage to the plastic enclosure. Use the lifting eye-bolts.

Wire sealing connector

In conventional air-cooled motors, the stator wires are brought out of the motor housing into a terminal box for hook up.

In the integrated motor pump, a custom oil tight connector is used to bring the wires out to the terminal box. The connector consists of a flange with a molded center section (Figure 4). The molded center section is actually a continuation of the wire insulation, so there is no leakage point or joint between the flange and the wires as they pass through the flange.

Noise-reducing mounting rails

Eaton offers these accessories for use with the integrated motor pump to enhance the overall sound reduction of power units. Descriptions and assembly numbers for these items are available in the IMP catalog.

The mounting rail kits include integral shock and vibration absorbers sized specifically for the integrated motor pump. Rail sets are available for single and double pump versions, with an outboard pump support for large overhung double piston pumps.

These sound reduction accessories are highly recommended to achieve the lowest possible sound levels.

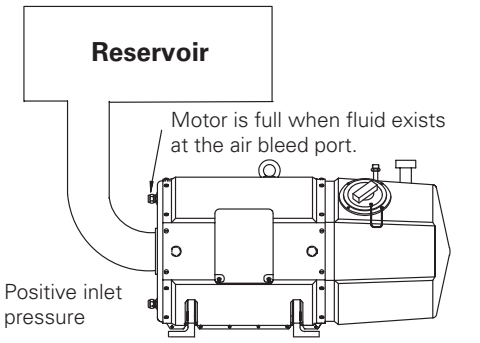

Figure 1

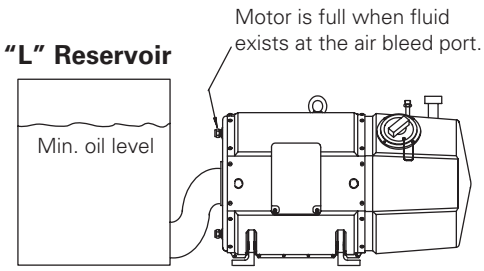

Figure 2

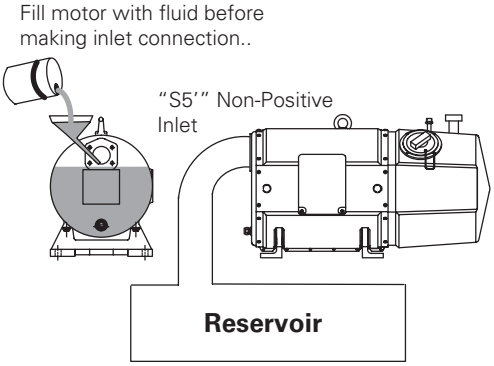

Figure 3

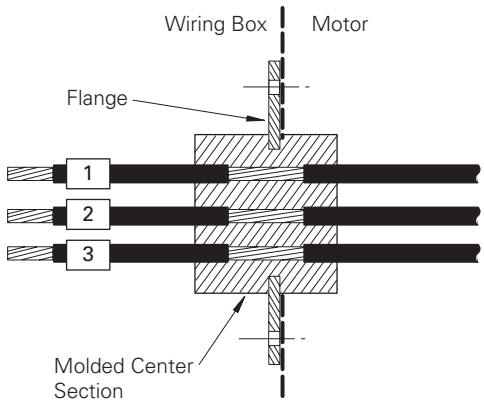

Figure 4

Integrated Motor Pump

Model code

MP	45	B1	R	PM	74	CM	/V55N	AC	F1	20	S**
1	2	3	4	5	6	7	8	9	10	11	12

1 Product family code

MP Integrated motor pump

2 Motor Power (sizes)

7.5 7.5 kW, 10 hp
15 15 kW, 20 hp
22 22 kW, 30 hp
45 45 kW, 60 hp
75 75 kW, 100 hp
92 92 kW, 125 hp

3 Voltage (1.5 service factor)

A1 230V/60Hz (only available on MP7.5/MP15 MP22models)
B1 460V/60Hz
C1 575V/60Hz
D1 380V/50HZ
E1 380V/60Hz
F1 400V/50Hz

4 Terminal box position (viewed from motor end)

R Right side (Preferred)
L Left side

5 Hydraulic pump type

P Piston-PVQ series
PM Piston-PVM series
V Vane-V series or V10 series (second pump only
VMQ Vane-VMQ series

6 Pump displacments-cm³/rev

Piston: PVQ
10, 13, 20, 32, 40, 45
Note: PVQ10/PVQ13 Second pump only

Piston: PVM
18, 20, 40, 50, 57, 63, 74, 81, 98, 106, 131, 141

Vane: V series single
18, 27, 36, 40, 45, 55, 67, 81, 97, 112, 121, 138, 162, 193

Vane: V series double - shaft end
40, 45, 55, 67, 81, 97, 112, 121, 138, 162, 19

Vane: V series double - cover end
18, 27, 36, 40, 45, 55, 67, 81, 97, 112, 121

Vane: V10 (second pump only)
3, 6, 10, 13, 16, 20, 23

Vane: VMQ
10, 16, 20, 25, 32, 40, 45, 50, 63, 71, 80, 90, 100, 112, 125, 135, 140, 158, 160, 180, 195, 215, 240

Vane: VMQ double - shaft end
10, 16, 20, 25, 32, 40, 45, 50, 63, 71, 80, 90, 100, 112, 125, 135, 140, 158, 160, 180, 195, 215, 240

Vane: VMQ double - cover end
10, 16, 20, 25, 32, 40, 45, 50, 63, 71, 80, 90, 100, 112, 125, 135, 140, 158

Example:

P20	VMQ25
PVM57	VMQ16045
V40	
V4018	

Note: When ordering double vane pump,designate shaft and cover end displacements.
For min/max speed range, refer to individual pump pages in the catalog

7 Pump control type

N No control (vane pump only)
PVQ Piston pumps with cm³/rev displacements of 10, 13, 20, 32, 40, 45
C Pressure Compensator(10, 20, 40)
Range is 25-210 bar (350-3000 psi)
CM Pressure Compensator Range is 25-100 bar (350-1500 psi)
CV Pressure compensator with load sensing (10, 20, 40)
Range is 25-210 bar (350-3000 psi)
CG Pressure compensator with remote control (10, 20, 40)
Range is 25-210 bar (350-3000 psi)
Note: Displacements 13, 32, 45 max. Pressure is 140 bar (2000 psi)
PVM Piston pumps with cm³/rev displacements of 18, 20, 45, 50, 57, 63, 74, 81, 98, 106, 131, 141
C Pressure Compensator(18, 45, 57, 74, 98, 131)
Range is 130-280 bar (1900-4000 psi)
CM Pressure Compensator Range is 40-130 bar (580-1900 psi)
CV Pressure compensator with load sensing (18, 45, 57, 74, 98, 131)
Range is 130-280 bar (1900-4000 psi)
IC Industrial Control(57, 63, 74, 81, 98, 106, 131, 141
Note: Displacements 20, 50, 63, 81, 106, 141 max. Pressure is 230 bar (3300 psi)

Integrated Motor Pump

Model code continued

MP	45	B1	R	PM	74	CM	/V55N	AC	F1	20	S**
1	2	3	4	5	6	7	8	9	10	11	12

8 **Second pump code (if required)**

Note: Second pump code must be preceded by a slash (/).
Example: P45C / V45N or PVM57IC / P10CG

9 **Pump outlet position (1st pump)**
(viewed from electric motor end)

A 12 o'clock (preferred)
B 3 o'clock
C 9 o'clock

Note: On piston pump units the case drain will always be at the 12 o'clock position.

Pump outlet position (2nd pump if required)
(viewed from electric motor end)

A 12 o'clock (preferred)
B 3 o'clock
C 9 o'clock

Note: The position of mounting bolts on piston pump thru-drive flange adaptors requires that vane pump (V series/VMQ) outlets be located at either 90° CW or CCW from the piston pump outlet.

10 **Pump outlet connections**

F1 4-bolt flange port (preferred)
ISO 6162-Type 1 (inch)
F2 4-bolt flange port, ISO 6162-Type 2 (metric)

Note: V10 pump outlet, case drain, load sense, and remote comp connections will be ORFS type.

11 **Design number**

Subject to change. Installation dimensions unaltered for design numbers 20 through 29 inclusive.

10 **Special feature suffix**

S1 Pump compensator type CG remote control
S4 IC compensator
S5 Non-flooded inlet
S11 Adjustable max volume stop on piston pumps
S22 WYE start/DELTA run motor winding, six leads
S54 Non-flooded inlet and WYE start/DELTA run motor winding with six leads
S137 No sound enclosure. No pump extension outlet(s) or casedrain(s)/control(s) for piston pumps. All customer connections directly to pump ports.

Others available on request

SPX9000 Adjustable Frequency Drives

Product description

For additional details refer SPX9000 catalog, CA08100007E
Learn more about SPX 9000 variable frequency drive

The SPX9000 series adjustable frequency drives from Eaton's electrical sector are specifically designed for high performance applications. Equipped with high processing power, the SPX9000 can use information from an encoder or a resolver in order to provide very precise motor control. Sensorless vector and simple frequency control are also supported. Typical applications requiring high performance are: masterslave drives, positioning applications, winder tension control and synchronization.

The core of the SPX9000 is a fast microprocessor, providing high dynamic performance for applications where good motor handling and reliability are required. It can be used both in open loop applications as well as in applications requiring encoder feedback.

The SPX9000 supports fast drive-to-drive communication. It also offers an integrated data logger functionality for analysis of dynamic events without the need of additional hardware. Simultaneous fast monitoring of several drives can be done by using the 9000Xdrive tool and CAN communication. In applications where reliability and quality are essential for high-performance, the SPX9000 is the logical choice.

The SPX9000 is rated for either high overload (I_H) or low overload (I_L). IL indicates 110% overload capacity for 1 minute out of 10 minutes. I_H indicates 150% overload capacity for 1 minute out of 10 minutes.

Features and benefits

- Speed error <0.01%, depending on the encoder
- Incremental or absolute encoder support
- Encoder voltages of 5V (RS-422), 15V or 24V, depending on the option card
- Full torque control at all speeds, including zero
- Torque accuracy <2%; <5% down to zero speed
- Starting torque >200%, depending on motor and drive sizing
- Integrated datalogger for system analysis
- Fast multiple drive monitoring with PC
- Full capability for master/ slave configurations
- High-speed bus (12 Mbit/s) for fast inter-drive communication
- High-speed applications (up to 7200 Hz) possible
- Robust design—proven 500,000 hours MTBF
- Integrated 3% line reactors standard on drives from FR4 through FR9
- Line reactor is included but is separated from chassis
- EMI/RFI Filters H standard up to 200 hp IH 480V, 100 hp IH 230V
- Simplified operating menu allows for typical programming changes, while programming mode provides control of everything
- Quick Start Wizard built into the programming of the drive ensures a smooth start-up
- Keypad can display up to three monitored parameters simultaneously
- LOCAL/REMOTE operation from keypad
- Copy/paste function allows transfer of parameter settings from one drive to the next
- Standard NEMA Type 12/ IP54 keypad on all drives
- Hand-held auxiliary 240 power supply allows programming/monitoring of control module without applying full power to the drive
- The SPX can be flexibly adapted to a variety of needs using our preinstalled "Seven in One" precision application programs consisting of:
  - Basic
  - Standard
  - Local/remote
  - Multi-step speed control
  - PID control
  - Multi-purpose control
  - Pump and fan control with auto change
- Additional I/O and communication cards provide plug and play functionality
- I/O connections with simple quick connection terminals
- Control logic can be powered from an external auxiliary control panel, internal drive functions and fieldbus if necessary
- Brake chopper standard from: 1–30 hp/380–500V 3/4–15 hp/208–230V
- NEMA Type 1/IP21 enclosures available Frame Sizes FR4–FR11, NEMA Type 12/IP54 enclosures available Frame Sizes FR4– FR10 (FR10 and FR11 freestanding drives)
- Open chassis FR10 and greater
- Standard option board configuration includes an A9 I/O board and an A2 relay output board installed in slots A and B

Standards and certifications

Product

- IEC 61800-2

Safety

- UL 508C

EMC (at default settings)

- Immunity: Fulfills all EMC immunity requirements; Emissions: EN 61800-3, LEVEL H
- UL Listed
- CE

SPX9000 Adjustable Frequency Drives

Model code

SPX	010	A	1	-	4	A	1	B	1
1	2	3	4		5	6	7	8	9

1 Product family

SPX	Open drives

2 Horsepower rating

F07	3/4	**125**	125
001	1	**150**	150
F15	1-1/2	**250**	250
002	2	**300**	300
003	3	**350**	350
004	5 (I_L)	**400**	400
005	5	**500**	500
006	7-1/2 (I_L)	**550**	550
007	7-1/2	**600**	600
010	10	**650**	650
015	15	**700**	700
020	20	**800**	800
025	25	**900**	900
030	30	**H10**	1000
040	40	**H12**	1200
050	50	**H13**	1350
060	60	**H15**	1500
075	75	**H16**	1600
100	100	**H20**	2000

3 AFD Software series

A	Standard software

4 Enclosure③

1	NEMA Type 1/IP21

5 Voltage rating

2	230V (208–240)
4	480V (380–500)
5	575V (525–690)

6 Keypad

A	Alphanumeric

7 Input options①

1	Three-phase, EMC H
2	Three-phase, EMC N
4	Three-phase, EMC L

8 Brake chopper options②

N	No brake chopper circuit
B	Internal brake chopper circuit

9 Board modifications

1	Standard boards

10 Options

Options appear in alphabetical order

Extended I/O card options

A3	2 RO, Therm
A4	Encoder low volt +5V/15V24V
A5	Encoder high volt +15V/24V
A7	Double Encoder
A8	6 DI, 1 DO, 2 AI, 1AO
AE	3 DI (Encoder 10–24V), Out +15V/+24V 2 DO (pulse + direction)
B1	6 DI, 1 ext +24 Vdc/EXT +24 Vdc
B2	1 RO (NC-NO), 1 RO (NO), 1 therm
B4	1 AI (mA isolated), 2 AO (mA isolated), 1 ext +24 Vdc/ EXT + 24 Vdc
B5	3 RO (NO)
B8	1 ext +24 Vdc/EXT +24 Vdc, 3 Pt100
B9	1 RO (NO), 5 DI 42–240 Vac input
BB	SPI, absolute encoder

Communication cards

CI	Modbus TCP	**C6**	CANopen (slave)
CQ	EtherNet/IP	**C7**	DeviceNet
C2	Modbus	**C8**	Modbus (D9 type connector)
C3	PROFIBUS DP	**D3**	RS-232 with D9 connection
C5	PROFIBUS DP (D9 connector)		

Notes

① All 230V drives and 480V drives up to 200 hp (IH) are only available with input option 1 (EMC level H). 480V drives 250 hp (IH) or larger are available with input option 2 (EMC level N). 575V drives 200 hp (IH) or larger are available with input option 2. 575V drives up to 150 hp (IH) are available with input option 4 (EMC level L). 480V and 690V freestanding drives are available with input option 4 (EMC level L)

② 480V drives up to 30 hp (IH) are only available with brake chopper option B. 480V drives 40 hp (IH) or larger come standard with brake chopper option N. 230V drives up to 15 hp (IH) are only available with brake chopper option B. 230V drives 20 hp and larger come standard with brake chopper option N. All 575V drives come standard without brake chopper option (N). N = No brake chopper

③ 480V drives 250–350 hp (IH) and 690V drives 200–300 hp (IH) are available with enclosure style 0 (chassis). 480V and 690V FR10 freestanding drives are available with 1 (NEMA Type 1/IP21) or 2 (NEMA Type 12/IP54). FR11 freestanding drives are only available with enclosure style 1 (NEMA Type 1/IP21)

SPX9000 Adjustable Frequency Drives

208–240V, NEMA type 1/IP21 drives

Frame Size	HP (I_H)	Current (I_H)	HP (I_L)	Current (I_L)	Catalog number
FR4	3/4	3.7	1	4.8	SPXF07A1-2A1B1
	1	4.8	1-1/2	6.6	SPX001A1-2A1B1
	1-1/2	6.6	2	7.8	SPXF15A1-2A1B1
	2	7.8	3	11	SPX002A1-2A1B1
	3	11	—	12.5	SPX003A1-2A1B1
FR5	—	12.5	5	17.5	SPX004A1-2A1B1
	5	17.5	7-1/2	25	SPX005A1-2A1B1
	7-1/2	25	10	31	SPX007A1-2A1B1
FR6	10	31	15	48	SPX010A1-2A1B1
	15	48	20	61	SPX015A1-2A1B1
FR7	20	61	25	75	SPX020A1-2A1N1
	25	75	30	88	SPX025A1-2A1N1
	30	88	40	114	SPX030A1-2A1N1
FR8	40	114	50	140	SPX040A1-2A1N1
	50	140	60	170	SPX050A1-2A1N1
	60	170	75	205	SPX060A1-2A1N1
FR9	75	205	100	261	SPX075A1-2A1N1
	100	261	—	—	SPX100A1-2A1N1

SPX9000 Adjustable Frequency Drives

380–500V, NEMA type 1/IP21 drives

Frame Size	HP (I_H)	Current (I_H)	HP (I_L)	Current (I_L)	Catalog number
FR4	1	2.2	1-1/2	3.3	SPX001A1-4A1B1
	1-1/2	3.3	2	4.3	SPXF15A1-4A1B1
	2	4.3	3	5.6	SPX002A1-4A1B1
	3	5.6	5	7.6	SPX003A1-4A1B1
	5	7.6	—	9	SPX005A1-4A1B1
	—	9	7-1/2	12	SPX006A1-4A1B1
FR5	7-1/2	12	10	16	SPX007A1-4A1B1
	10	16	15	23	SPX010A1-4A1B1
	15	23	20	31	SPX015A1-4A1B1
FR6	20	31	25	38	SPX020A1-4A1B1
	25	38	30	46	SPX025A1-4A1B1
	30	46	40	61	SPX030A1-4A1B1
FR7	40	61	50	72	SPX040A1-4A1N1
	50	72	60	87	SPX050A1-4A1N1
	60	87	75	105	SPX060A1-4A1N1
FR8	75	105	100	140	SPX075A1-4A1N1
	100	140	125	170	SPX100A1-4A1N1
	125	170	150	205	SPX125A1-4A1N1
FR9	150	205	200	261	SPX150A1-4A1N1
	200	245	250	300	SPX200A1-4A1N1

380–500V, NEMA type 1/IP21 freestanding drives

Frame Size	HP (I_H)	Current (I_H)	HP (I_L)	Current (I_L)	Catalog number
FR10	250	330	300	385	SPX250A1-4A4N1
	300	385	350	460	SPX300A1-4A4N1
	350	460	400	520	SPX350A1-4A4N1
FR11	400	520	500	590	SPX400A1-4A4N1
	500	590	550	650	SPX500A1-4A4N1
	550	650	600	730	SPX550A1-4A4N1

Note

Integrated fuses as standard. Limited option selection available; 115V transformer (KB), light kit (L1), HOA (K4), speed potentiometer w/HOA (K2), disconnect switch (P2).

SPX9000 Adjustable Frequency Drives

525–690V, NEMA type 1/IP21 drives

Frame Size	HP (I_H)	Current (I_H)	HP (I_L)	Current (I_L)	Catalog number
FR6	2	3.3	3	4.5	SPX002A1-5A4N1
	3	4.5	—	5.5	SPX003A1-5A4N1
	—	5.5	5	7.5	SPX004A1-5A4N1
	5	7.5	7-1/2	10	SPX005A1-5A4N1
	7-1/2	10	10	13.5	SPX007A1-5A4N1
	10	13.5	15	18	SPX010A1-5A4N1
	15	18	20	22	SPX015A1-5A4N1
	20	22	25	27	SPX020A1-5A4N1
	25	27	30	34	SPX025A1-5A4N1
FR7	30	34	40	41	SPX030A1-5A4N1
	40	41	50	52	SPX040A1-5A4N1
FR8	50	52	60	62	SPX050A1-5A4N1
	60	62	75	80	SPX060A1-5A4N1
	75	80	100	100	SPX075A1-5A4N1
FR9	100	100	125	125	SPX100A1-5A4N1
	125	125	150	144	SPX125A1-5A4N1
	150	144	—	170	SPX150A1-5A4N1
	—	170	200	208	SPX175A1-5A4N1

525–690V, NEMA type 1/IP21 freestanding drives

Frame Size	HP (I_H)	Current (I_H)	HP (I_L)	Current (I_L)	Catalog number
FR10	200	208	250	261	SPX200A1-5A4N1
	250	261	300	325	SPX250A1-5A4N1
	300	325	400	385	SPX300A1-5A4N1
FR11	400	385	450	460	SPX400A1-5A4N1
	450	460	500	502	SPX450A1-5A4N1
	500	502	550	590	SPX500A1-5A4N1

Note

Integrated fuses as standard. Limited option selection available; 115V transformer (KB), light kit (L1), HOA (K4), speed potentiometer w/HOA (K2), disconnect switch (P2).

SPX9000 Adjustable Frequency Drives

9000X series option board kits

The 9000X series drives can accommodate a wide selection of expander and adapter option boards to customize the drive for your application needs. The drive's control unit is designed to accept a total of five option boards.

The 9000X series factory installed standard board configuration includes an A9 I/O board and an A2 relay output board, which are installed in slots A and B.

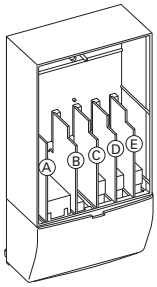

Option board kits

Option kit description ①	Allowed slot locations ②	Catalog number	Local/Basic	Remote	Standard	MSS	PID	Multi-P.	PFC
Built-in I/O cards									
6 DI, 1 DO, 2 AI, 1AO, 1 +10 Vdc ref, 2 ext +24 Vdc/EXT +24 Vdc	A	OPTA9	■	■	■	■	■	■	■
2 RO (NC-NO)	B	OPTA2	■	■	■	■	■	■	■
Optional I/O cards									
2 RO, therm	B	OPTA3	—	■	■	■	■	■	■
Encoder low volt +5V/15V/24V	C	OPTA4	—	■	■	■	■	■	■
Encoder high volt +15V/24V	C	OPTA5	—	■	■	■	■	■	■
6 DI, 1 DO, 2 AI, 1 AO	A	OPTA8	—	■	■	■	■	■	■
6 DI, 1 DO, 2 AI, 1AO, 1 +10 Vdc ref, 2 ext +24 Vdc/EXT +24 Vdc	A	OPTA1	—	■	■	■	■	■	■
3 DI (encoder 10–24V), out +15V/+24V, 2 DO (pulse+direction)—SPX only	C	OPTAE	■	■	■	■	■	■	■
6 DI, 1 ext +24 Vdc/EXT +24 Vdc	B, C, D, E	OPTB1	—	—	—	—	—	■	■
1 RO (NC-NO), 1 RO (NO), 1 therm	B, C, D, E	OPTB2	—	—	—	—	—	■	■
1 AI (mA isolated), 2 AO (mA isolated), 1 ext +24 Vdc/EXT +24 Vdc	B, C, D, E	OPTB4	—	■	■	■	■	■	■
3 RO (NO)	B, C, D, E	OPTB5	—	—	—	—	—	■	■
1 ext +24 Vdc/EXT +24 Vdc, 3 Pt100	B, C, D, E	OPTB8	—	—	—	—	—	—	—
1 RO (NO), 5 DI 42–240 Vac input	B, C, D, E	OPTB9	—	—	—	—	—	■	■
Communication cards									
Modbus③	D, E	OPTC2	■	■	■	■	■	■	■
Modbus TCP	D, E	OPTCI	■	■	■	■	■	■	■
EtherNet/IP	D, E	OPTCQ	■	■	■	■	■	■	■
PROFIBUS DP	D, E	OPTC3	■	■	■	■	■	■	■
PROFIBUS DP (D9 connector)	D, E	OPTC5	■	■	■	■	■	■	■
CANopen (slave)	D, E	OPTC6	■	■	■	■	■	■	■
DeviceNet	D, E	OPTC7	■	■	■	■	■	■	■
Modbus (D9 type connector)	D, E	OPTC8	■	■	■	■	■	■	■
RS-232 with D9 connection	D, E	OPTD3	■	■	■	■	■	■	■

Notes

① AI = Analog Input; AO = Analog Output, DI = Digital Input, DO = Digital Output, RO = Relay Output

② Option card must be installed in one of the slots listed for that card. Slot indicated in bold is the preferred location.

③ OPTC2 is a multi-protocol option card.

Modbus RTU network

The Modbus Network Card OPTC2 is used for connecting the 9000X Drive as a slave on a Modbus network. The interface is connected by a 9-pin DSUB connector (female) and the baud rate ranges from 300 to 19200 baud. Other communication parameters include an address range from 1 to 247; a parity of None, Odd or Even; and the stop bit is 1.

PROFIBUS network communications

The PROFIBUS Network Card OPTC3 is used for connecting the 9000X Drive as a slave on a PROFIBUS-DP network. The interface is connected by a 9-pin DSUB connector (female). The baud rates range from 9.6K baud to 12M baud, and the addresses range from 1 to 127.

CANopen (Slave) communications

The CANopen (Slave) Network Card OPTC6 is used for connecting the 9000X Drive to a host system. According to ISO11898 standard cables to be chosen for CAN bus should have a nominal impedance of 120 ohms, and specific line delay of nominal 5 nS/m. 120 ohms line termination resistors required for installation.

DeviceNet network communications

The DeviceNet Network Card OPTC7 is used for connecting the 9000X Drive on a DeviceNet Network. It includes a 5.08 mm pluggable connector. Transfer method is via CAN using a two-wire twisted shielded cable with two-wire bus power cable and drain. The baud rates used for communication include 125K baud, 250K baud and 500K baud.

Modbus/TCP network communications

The Modbus/TCP Network Card OPTCI is used for connecting the 9000X Drive to Ethernet networks utilizing Modbus protocol. It includes an RJ-45 pluggable connector. This interface provides a selection of standard and custom register values to communicate drive parameters. The board supports 10 Mbps and 100 Mbps communication speeds. The IP address of the board is configurable over Ethernet using a supplied software tool.

EtherNet/IP network communications

The EtherNet/IP Network Card OPTCK is used for connecting the 9000X Drive to Ethernet/Industrial Protocol networks. It includes an RJ-45 pluggable connector. The interface uses CIP objects to communicate drive parameters (CIP is "Common Industrial Protocol", the same protocol used by DeviceNet). The board supports 10 Mbps and 100 Mbps communication speeds. The IP address of the board is configurable by Static, BOOTP and DHCP methods.

SPX9000 Adjustable Frequency Drives

Control panel options

Factory options

Description	Catalog number
Local/Remote Keypad SPX9000 Control Panel—This option is standard on all drives and consists of an RS-232 connection, backlit alphanumeric LCD display with nine indicators for the RUN status and two indicators for the control source. The nine pushbuttons on the panel are used for panel programming and monitoring of all SPX9000 parameters. The panel is detachable and isolated from the input line potential. Include LOC/REM key to choose control location.	KEYPAD-LOC/REM
Keypad Remote Mounting Kit—This option is used to remote mount the SPX9000 keypad. The footprint is compatible to the SPX9000 remote mount kit. Includes 10 ft cable, keypad holder and mounting hardware.	OPTRMT-KIT-9000X

Miscellaneous options

Description	Catalog number
9000XDrive—A PC-based tool for controlling and monitoring of the SPX9000. Features include: loading parameters that can be saved to a file or printed, setting references, starting and stopping the motor, monitoring signals in graphical or text form, and real-time display. To avoid damage to the drive or computer, SVDrivecable must be used.	9000XDRIVE
SVDrivecable—6 ft (1.8m) RS-232 cable (22 gauge) with a 7-pin connector on each end. Should be used in conjunction with the 9000XDrive option to avoid damage to the SPX9000 or computer. The same cable can be used for downloading specialized applications to the drive.	SVDRIVECABLE
External Dynamic Braking Resistors—Used with the dynamic braking chopper circuit to absorb motor regenerative energy for stopping the load and to dissipate the energy flowing back into the drive. Resistors are separated into standard duty and heavy-duty. Standard duty is defined as 20% duty or less with 100% braking torque, while heavy-duty is defined as 50% duty or less with 150% braking torque.	See the original SPX9000 catalog

SPX9000 Adjustable Frequency Drives

Technical data and specifications

Description	Specification
Input Ratings	
Input voltage (Vin)	+10%/–15%
Input frequency (fin)	50/60 Hz (variation up to 45–66 Hz)
Connection to power	Once per minute or less (typical operation)
High withstand rating	100 kAIC
Output Ratings	
Output voltage	0 to Vin
Continuous output current	I_H rated 100% at 122°F (50°C), FR9 and below I_L rated 100% at 104°F (40°C), FR9 and below I_H/I_L 100% at 104°F (40°C), FR10 and above
Overload current (I_H/I_L)	150% I_H, 110% I_L for 1 min.
Output frequency	0 to 320 Hz
Frequency resolution	0.01 Hz
Initial output current (I_H)	250% for 2 seconds
Control Characteristics	
Control method	Frequency control (V/f) Open loop: sensorless vector control Closed loop: frequency control Closed loop: vector control
Switching frequency Frame 4–6 Frame 7–12	Adjustable with parameter 2.6.9 1 to 16 kHz; default 10 kHz 1 to 10 kHz; default 3.6 kHz
Frequency reference	Analog input: Resolution 0.1% (10-bit), accuracy ±1% V/Hz Panel reference: Resolution 0.01 Hz
Field weakening point	30 to 320 Hz
Acceleration time	0 to 3000 sec.
Deceleration time	0 to 3000 sec.
Braking torque	DC brake: 30% x Tn (without brake option)
Ambient Conditions	
Ambient operating temperature	14°F (–10°C), no frost to 122°F (50°C) IH (FR4–FR9) 14°F (–10°C), no frost to 104°F (40°C) IL (FR10 and up) 14°F (–10°C), no frost to 104°F (40°C) IL (all frames)
Storage temperature	–40° to 158°F (–40° to 70°C)
Relative humidity	0 to 95% RH, noncondensing, non-corrosive, no dripping water
Air quality	Chemical vapors: IEC 721-3-3, unit in operation, class 3C2; Mechanical particles: IEC 721-3-3, unit in operation, class 3S2
Altitude	100% load capacity (no derating) up to 3280 ft (1000m); 1% derating for each 328 ft (100m) above 3280 ft (1000m); max. 9842 ft (3000m)
Vibration	EN 50178, EN 60068-2-6; 5 to 50 Hz, displacement amplitude 1 mm (peak) at 3 to 15.8 Hz, max. acceleration amplitude 1G at 15.8 to 150 Hz
Shock	EN 50178, EN 60068-2-27 UPS Drop test (for applicable UPS weights) Storage and shipping: max. 15G, 11 ms (in package)
Enclosure class	NEMA 1/IP21 or NEMA 12/IP54, open chassis/IP20

Description	Specification
Control Connections	
Analog input voltage	0 to 10V, R = 200 kohms (–10 to 10V joystick control) resolution 0.1%; accuracy ±1%
Analog input current	0(4) to 20 mA; Ri—250 ohms differential
Digital inputs (6)	Positive or negative logic; 18 to 30 Vdc
Auxiliary voltage	+24V ±15%, max. 250 mA
Output reference voltage	+10V +3%, max. load 10 mA
Analog output	0(4) to 20 mA; RL max. 500 ohms; resolution 10 bit; Accuracy ±2%
Digital outputs	Open collector output, 50 mA/48V
Relay outputs	2 programmable Form C relay outputs switching capacity: 24 Vdc/8A, 250 Vac/8A, 125 Vdc/0.4A
Protections	
Overcurrent protection	Trip limit 4.0 x IH instantaneously
Overvoltage protection	Yes
Undervoltage protection	Yes
Earth fault protection	In case of earth fault in motor or motor cable, only the frequency converter is protected
Input phase supervision	Trips if any of the input phases are missing
Motor phase supervision	Trips if any of the output phases are missing
Overtemperature protection	Yes
Motor overload protection	Yes
Motor stall protection	Yes
Motor underload protection	Yes
Short-circuit protection	Yes (+24V and +10V reference voltages)
High Performance Features	
Speed error	<0.01%, depending on the encoder
Encoder support	Incremental or absolute
Encoder voltages	5V (RS-422), 15V or 24V, depending on the option card
Torque control	Full torque control at all speeds, including zero
Torque accuracy	<2%; <5% down to zero speed
Starting torque	>200%, depending on motor and drive sizing
Master/slave configurations	Full capability
System analysis	Integrated data logger
PC communication	Fast multiple drive monitoring with PC
Inter-drive communication	High-speed bus (12 Mbits/s)
High-speed applications	Up to 7200 Hz

SPX9000 Adjustable Frequency Drives

Dimensions - 9000X drives

For detailed dimensions refer SPX9000 catalog, CA08100007E
Learn more about SPX 9000 variable frequency drive

NEMA type 1/IP21 and NEMA type 12/IP54, FR4, FR5 and FR6

Approximate dimensions in Inches (mm)

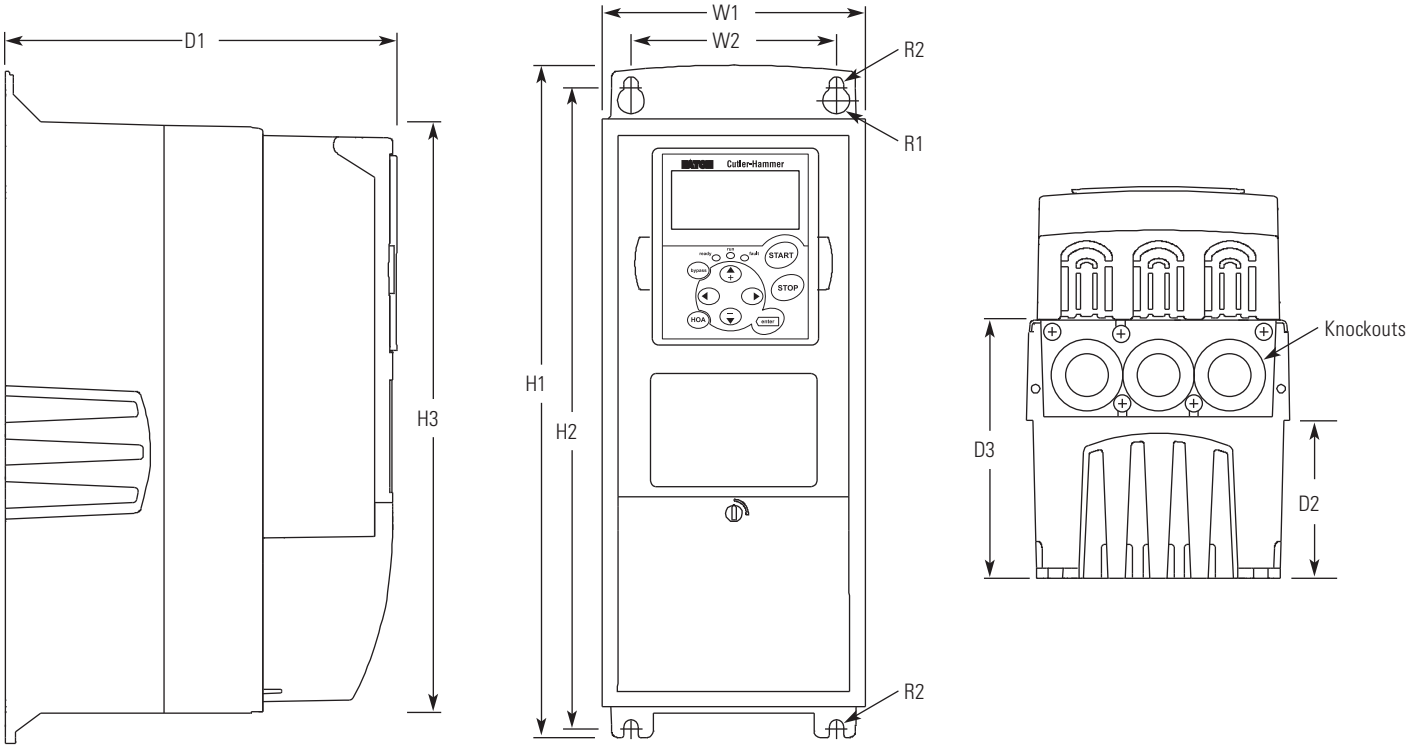

Voltage	hp (I_H)	H1 H2	H3		D1	D2	D3 W1	W2	R1 Dia. R2 Dia.		Lb (kg)	Weight N1 (O.D.)	Knockouts at Inches (mm)
FR4													
230V	3/4–3	12.9 (327)	12.3 (313)	11.5 (292)	7.5 (190)	3.0 (77)	5.0 (126)	5.04 (128)	3.9 (100)	0.5 (13)	0.3 (7)	11.0 (5)	3 at 10.1 (28)
480V	1–5												
FR5													
230V	5–7-1/2	16.5 (419)	16.0 (406)	15.3 (389)	8.4 (214)	3.9 (100)	5.8 (148)	5.7 (144)	3.9 (100)	0.5 (13)	0.3 (7)	17.9 (8)	2 at 1.5 (37) 1 at 10.1 (28)
480V	7-1/2–15												
FR6													
230V	10–15	22.0 (558)	21.3 (541)	20.4 (519)	9.3 (237)	4.2 (105)	6.5 (165)	7.7 (195)	5.8 (148)	0.6 (15.5)	0.4 (9)	40.8 (19)	3 at 1.5 (37)
480V	20–30												
575V	2–25												

PowerXL DG1 Series Drives

Product description

For other details refer to "Eaton Electrical PowerXL DG1 VFD" catalog, CA08100007E
Learn more about PowerXL DG1

The DG1 general purpose drives are part of Eaton's next generation PowerXL series of adjustable frequency drives specifically engineered for today's more demanding commercial and industrial applications. The power unit makes use of the most sophisticated semiconductor technology and a highly modular construction that can be flexibly adapted to meet the customer's needs.

The control module was designed to include today's standard communication protocols and I/O while still having the modularity to add additional option cards.

Eaton's patented Active Energy Control is also a standard feature on DG1 drives, offering customers increased efficiency, safety and reliability.

These drives continue the tradition of robust performance and raise the bar on features and functionality, ensuring the best solution at the right price.

Features and benefits

Hardware

- Brake chopper standard on Frames 1, 2, 3
- Dual overload ratings
  - 110% variable torque (IL)
  - 150% constant torque (IH)
- Type 1/IP21 and Type 12/IP54 enclosures available
- Integrated common mode reduction 5% DC link choke with input surge protection
- EMI/RFI filters standard on all drives—meets EMC Category C2
- Real-time clock—supports calendaring and PLC functionality
- Graphic LCD display and keypad—supports simple menu navigation as well as on-screen diagnostics and troubleshooting
- LOCAL/REMOTE operation from keypad and two configurable soft keys
- Conformal coated control and power boards standard
- Control logic can be powered from an external auxiliary control panel—internal drive functions and fieldbus if necessary
- Standard I/O:
  - 8DI, 1DO
  - 2AI, 2AO
  - 2FC, 1FA relays
- Built-in standard communications:
  - EtherNet/IP, Modbus TCP
  - RS-485: Modbus RTU, BACnet MS/TP
- Seamless integration into EtherNet/IP networks via EIP-Assist I/O tag-generation tool
- Two expansion slots—intended to support additional I/O or communication protocols as necessary
- Quick disconnect terminals for I/O connections—supports fast easy installation
- Safe Torque Off (STO) built-in with functional safety SIL1 certification

Software

- Active energy control—minimizes energy losses in your motor, resulting in industry-leading energy efficiency for your application
- Quick Start Wizard upon initial power-up supports fast, easy installation
- Standard applications:
  - Standard
  - Multi-pump and fan Control
  - Multi-PID
  - Multi-purpose
- Copy/paste functionality on drive keypad - allows for fast setup of multiple drives
- Pre-programmed I/O - supports fast, easy installation for most applications
- Dynamic motor regenerative energy management
- Advanced PC Tool with diagnostic capabilities
- Two keypad software keys for easy menu navigation and shortcuts

Product Range
230 V to 125 hp, 312 A, 90 kW
480 V to 250 hp, 310 A, 160 kW
575 V to 250 hp, 250 A, 160 kW

See availability in the model code section.

Standards and certifications

Product

- IEC/EN 61800-5-1
- IEC/EN 61800-5-2
- UL 508C
- IEC 61508
- EN 62061
- EN ISO 13849-1

EMC

- Immunity: IEC/EN 61800-3
- Category C2

Certification

- UL
- cUL
- CE
- C-Tick
- RoHS
- EAC

PowerXL DG1 Series Drives

Model code - DG1 general purpose drive

For other details refer to "Eaton Electrical PowerXL DG1 VFD" catalog, CA08100007E

Series			Power Part				Options		
D	G1	-	3	4	4D3	F	B	-	C	21	C
1	2		3	4	5	6	7		8	9	10

1 Basic naming

D Drive

2 Series

G1 General purpose

3 Phase reference

3 3~ INPUT/3~ OUTPUT

4 Input/Output voltage rating

2 230 V (208–240 V, –15%, +10%)
4 400 V (380–500 V, –15%, +10%)
5 575 V (525–600 V, –15%, +10%)

5 Output current rating (CT)

208–240 V
4D8 4.8 A, 0.75 kW, 1 hp
6D6 6.6 A, 1.1 kW, 1.5 hp
011 11 A, 2.2 kW, 3 hp
017 17.5 A, 3.7 kW, 5 hp
025 25 A, 5.5 kW, 7.5 hp
031 31 A, 7.5 kW, 10 hp
048 48 A, 11 kW, 15 hp
061 61 A, 15 kW, 20 hp
075 75 A, 18.5 kW, 25 hp
088 88 A, 22 kW, 30 hp
114 114 A, 30 kW, 40 hp
143 143 A, 37 kW, 50 hp
170 170 A, 45 kW, 60 hp
211 211 A, 55 kW, 75 hp*
248 248 A, 75 kW, 100 hp*

380–500 V
3D3 3.3 A, 1.1 kW, 1.5 hp
4D3 4.3 A, 1.5 kW, 2 hp
7D6 7.6 A, 3 kW, 5 hp
012 12 A, 5.5 kW, 7.5 hp
016 16 A, 7.5 kW, 10 hp
023 23 A, 11 kW, 15 hp
031 31 A, 15 kW, 20 hp
038 38 A, 18 kW, 25 hp
046 46 A, 22 kW, 30 hp
061 61 A, 30 kW, 40 hp
072 72 A, 37 kW, 50 hp
087 87 A, 45 kW, 60 hp
105 105 A, 55 kW, 75 hp
140 140 A, 75 kW, 100 hp
170 170 A, 90 kW, 125 hp
205 205 A, 110 kW, 150 hp*
245 245 A, 150 kW, 200 hp*

525–600 V
7D5 7.5 A, 3.7 kW, 5 hp
010 10 A, 5.5 kW, 7.5 hp
013 13.5 A, 7.5 kW, 10 hp
018 18 A, 11 kW, 15 hp
022 22 A, 15 kW, 20 hp
027 27 A, 18 kW, 25 hp
034 34 A, 22 kW, 30 hp
041 41 A, 30 kW, 40 hp
052 52 A, 37 kW, 50 hp
062 62 A, 45 kW, 60 hp
080 80 A, 55 kW, 75 hp
100 100 A, 75 kW, 100 hp
125 125 A, 90 kW, 125 hp
144 144 A, 110 kW, 150 hp*
208 208 A, 160 kW, 200 hp*

* Available in 2016

6 Internal EMC filter

D DC choke only
E EMC filter only
F Internal EMC filter and DC choke
N No EMC filter, no DC choke

7 Internal brake chopper

N No brake chopper
B Brake chopper

8 Display option

C LCD (graphical)
N No display

9 Enclosure (IP rating)

21 IP21/Type 1

10 Coating of boards

C Coated

PowerXL DG1 Series Drives

Model code - DG1 general purpose drive option boards

DX G - NET - PROFIBUS

1 2 3 4

1 **Basic naming**

DX	PowerXL drive

2 **Series**

G	General purpose

3 **Type**

NET	Communication card
EXT	I/O card
ACC	Accessory
SPR	Spare part
KEY	Keypad
CBL	Cable

4 **Function***

PROFIBUS	PROFIBUS
DEVICENET	DeviceNet
CANOPEN	CANopen
SWD	SmartWire

*Built-in standard communication protocols include: EtherNet/IP, Modbus TCP; Modbus RTU, BACnet MS/TP via RS-485.

PowerXL Series-DG1

Product selection

DG1 series drives—208–240 volt

Type 1/IP21

Frame Size	Constant torque (CT) / High overload (I_H)		Current A	Catalog number
	230 V, 50 Hz kW	230 V, 60 Hz hp		
FR2	3.7	5	17.5	DG1-32017FB-C21C
	5.5	7.5	25	DG1-32025FB-C21C
FR3	7.5	10	31	DG1-32031FB-C21C
	11	15	48	DG1-32048FB-C21C
FR4	15	20	61	DG1-32061FN-C21C
	18.5	25	75	DG1-32075FN-C21C
	22	30	88	DG1-32088FN-C21C
FR5	30	40	114	DG1-32114FN-C21C
	37	50	143	DG1-32143FN-C21C
	45	60	170	DG1-32170FN-C21C
FR6 ①	55	75	211	DG1-32211FN-C21C
	75	100	248	DG1-32248FN-C21C

Note: ① FR6 available in 2016.

DG1 series drives—380–500 volt

Type 1/IP21

Frame Size	Constant torque (CT)/High overload (I_H)		Current A	Catalog number
	400 V, 50 Hz kW	460 V, 60 Hz hp		
FR2	5.5	7.5	12	DG1-34012FB-C21C
	7.5	10	16	DG1-34016FB-C21C
	11	15	23	DG1-34023FB-C21C
FR3	15	20	31	DG1-34031FB-C21C
	18.5	25	38	DG1-34038FB-C21C
	22	30	46	DG1-34046FB-C21C
FR4	30	40	61	DG1-34061FN-C21C
	37	50	72	DG1-34072FN-C21C
	45	60	87	DG1-34087FN-C21C
FR5	55	75	105	DG1-34105FN-C21C
	75	100	140	DG1-34140FN-C21C
	90	125	170	DG1-34170FN-C21C
FR6 ①	100	150	205	DG1-34205FN-C21C
	150	200	245	DG1-34245FN-C21C

Note: ① FR6 available in 2016.

PowerXL Series-DG1

Product selection

DG1 series drives—575 volt ①

Type 1/IP21

Frame Size	Constant torque (CT)/High overload (I_H)		Current A	Catalog number
	575 V, 60 Hz kW	575 V, 60 Hz hp		
FR2	5.5	7.5	10	DG1-35010FB-C21C
	7.5	10	13.5	DG1-35013FB-C21C
	11	15	18	DG1-35018FB-C21C
FR3	15	20	22	DG1-35022FB-C21C
	18.5	25	27	DG1-35027FB-C21C
	22	30	34	DG1-35034FB-C21C
FR4	30	40	41	DG1-35041FN-C21C
	37	50	52	DG1-35052FN-C21C
	45	60	62	DG1-35062FN-C21C
FR5	55	75	80	DG1-35080FN-C21C
	75	100	100	DG1-35100FN-C21C
	90	125	125	DG1-35125FN-C21C
FR6②	110	150	144	DG1-35144FN-C21C
	150	200	208	DG1-35208FN-C21C

Note:

① 575 V available May 2015

② FR6 available in 2016.

Accessories

The PowerXL series—DG1 drives can accommodate a wide selection of expander and adapter option boards to customize the drive for your application needs. The drive's control unit is designed to accept a total of two additional option boards. The PowerXL series—DG1 drives come with a factory-installed standard board configuration including the following:

- Standard I/O:
  - 8DI, 1DO
  - 2AI, 2AO
  - 2FC, 1FA relays
- Standard communications:
  - EtherNet/IP, Modbus TCP
  - RS-485: Modbus RTU, BACnet MS/TP

PowerXL series—DG1 I/O card kits

Description	Catalog number
3 x DI, 3 x DO, 1 x thermistor, 24 Vdc/EXT option card	DXG-EXT-3DI3DO1T
1 x AI, 2 x AO (isolated to control board) option card	DXG-EXT-1AI2AO
3 x relay dry contact (2NO + 1NO/NC) option card	DXG-EXT-3RO
3 x PT100 RTD thermistor input option card	DXG-EXT-THER1
6 x DI 240 Vac input option card	DXG-EXT-6DI

PowerXL series—DG1 communication card kits

Description	Catalog number
PROFIBUS-DP communication card	DXG-NET-PROFIBUS
CANopen communication card	DXG-NET-CANOPEN
DeviceNet communication card	DXG-NET-DEVICENET
PROFIBUS DB9 to 5-pin adapter card	DXG-MNT-PROFIBUS
SmartWire communication card and module	DXG-NET-SWD

PowerXL series—DG1 keypad kits

Description	Catalog number
Standard keypad	DXG-KEY-LCD
Remote keypad kit (IP54 rated keypad holder and 3 m cable)	DXG-KEY-RMTKIT
1 m remote keypad cable	DXG-CBL-1M0
3 m remote keypad cable	DXG-CBL-3M0
Remote keypad mounting holder only	DXG-KEY-HOLDER
Type 12/IP54 keypad hole plug (maintain rating without keypad)	DXG-KEY-N12PLUG

PowerXL series—DG1 demo units

Demo Units

Description	Catalog number
DG1 control module demo stand	DG1-DEMO1
DG1 full drive demo case	DG1-DEMO2

PowerXL Series-DG1

Product description

Power Xpert inControl software

The PowerXL series PC tool is designed for programming, controlling and monitoring of the DG1 drives. Features include loading parameters that can be saved to a file or printed, setting references, starting and stopping the motor, monitoring signals in graphical or text form, and real-time display.

Power Xpert inControl software

Description	Catalog number
Software kit (software, cable, manual)	DXG-ACC-SOFTWARE
Software cable (USB to keypad [RJ45])	DXG-CBL-PCCABLE
Real-time clock battery (approximately 10,000 hours life)	DXG-ACC-RTBATT

PowerXL DG1 on-line resource

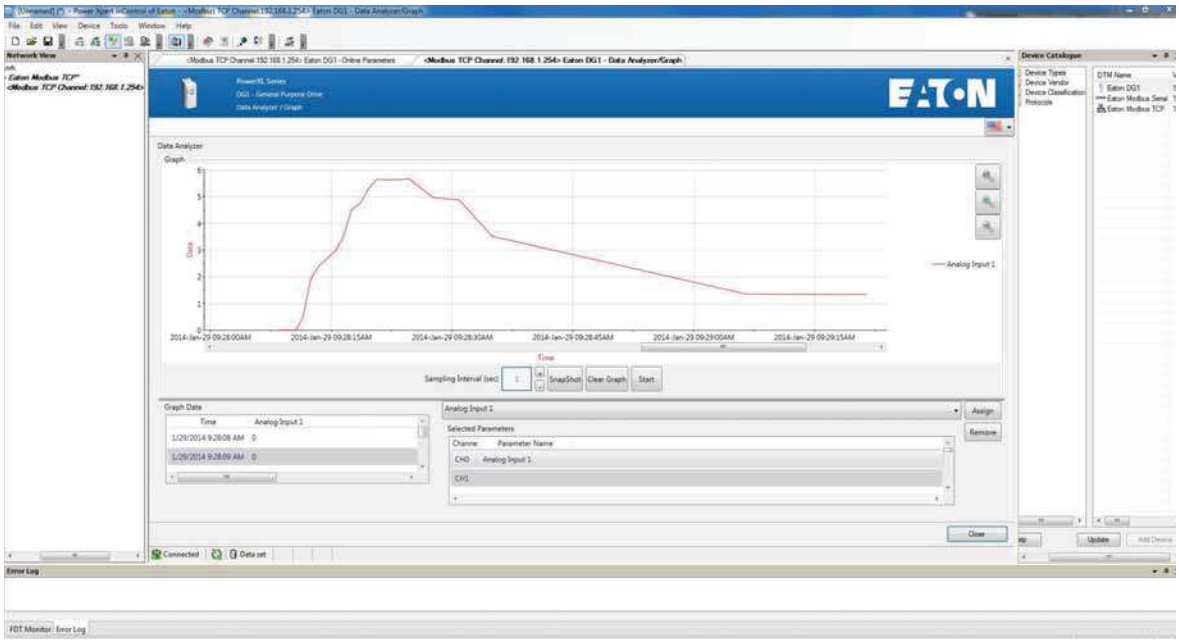

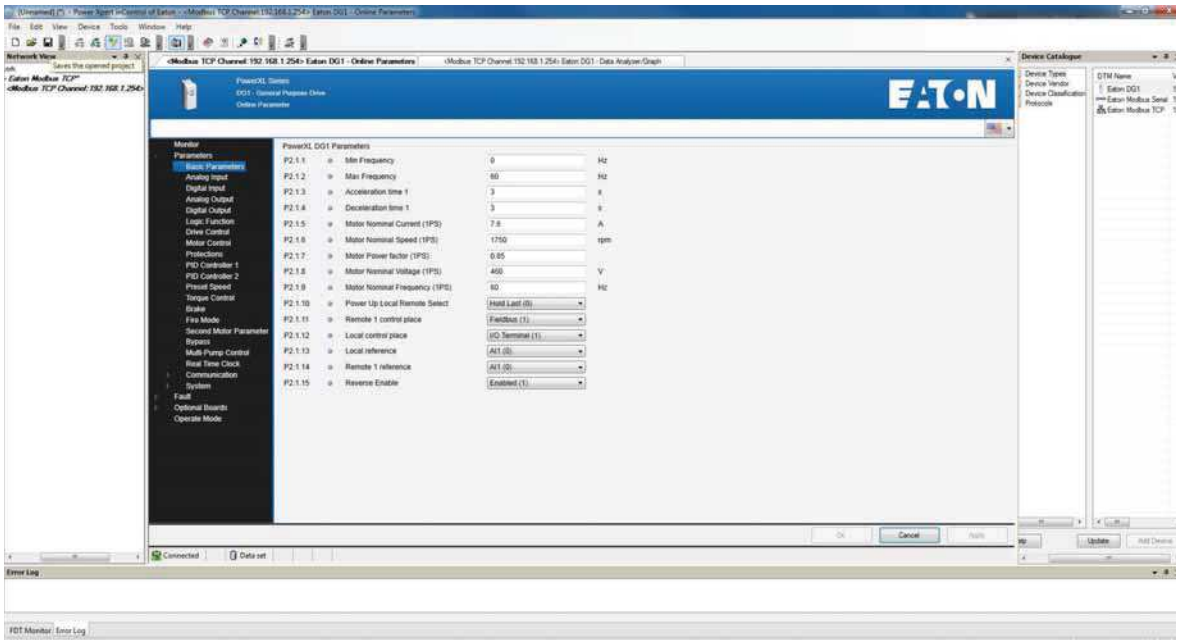

PowerXL series—DG1 technical data and specifications

Attribute	Description	Specification
Input ratings	Input voltage Uin	208 V to 240 V, 380 V to 500 V, 525 V to 600 V, –15 to 10%
	Input frequency	50 Hz to 60 Hz (variation up to 45 Hz to 66 Hz)
	Connection to power	Once per minute or less
	Starting delay	3 s (FR1 to FR2), 4 s (FR3), 5 s (FR4), 6 s (FR5 and FR6)
	Short-circuit withstand rating	100 kAIC (fuses and circuit breakers)
Output ratings	Output voltage	0 to Uin
	Continuous output current	IL: ambient temperature maximum 40 °C, up to 60 °C with derating, overload 1.1 x IL (1 min./10 min.)
		IH: ambient temperature maximum 50 °C, up to 60 °C with derating, overload 1.5 x IH (1 min./10 min.)
	Overload current	150% respectively 110% (1 min./10 min.)
	Initial output current	200% (2 s/20 s)
	Output frequency	0–400 Hz (standard)
	Frequency resolution	0.01 Hz
Control characteristics	Control methods	Frequency control Speed control Open-loop speed control Open-loop torque control
	Switching frequency	230 V/480 V defaults: FR1-3: 4 kHz FR4-5: 3.6 kH FR6: 2 kHz
		230 V/480 V range: FR1-3: 1 kHz to 12 kHz FR4-6: 1 kHz to 10 kHz
		575 V defaults: FR1-4: 3kHz FR5-6: 2KHz Automatic switching frequency de-rating in case of overload
		575 V range: FR1-6: 1 kHz to 6 kHz Automatic switiching frequency de-rating in case of overload
	Frequency reference	Analog input: resolution 0.1% (10-bit), accuracy +1% Analog output: resolution 0.1% (10-bit), accuracy +1% Panel reference: resolution 0.01 Hz
	Field weakening point	20 Hz to 400 Hz
	Acceleration time	0.1 s to 3000 s
	Deceleration time	0.1 s to 3000 s
	Braking torque	DC brake: 30% x Motor Rated Torque (Tn) (without brake chopper) Dynamic braking (with optional brake chopper using an external brake resistor): 100% continuous maximum rating
Ambient conditions	Ambient operating temperature	–10 °C (no frost) to +50 °C, up to +60 °C with derating (CT) –10 °C (no frost) to +40 °C, up to +60 °C with derating (VT)
	Storage temperature	–40 °C to +70 °C
	Relative humidity	0–95% RH, noncondensing, non-corrosive
	Air quality: • Chemical vapors • Mechanical particles	Tested according to IEC 60068-2-60 Test Key: Flowing mixed gas corrosion test, Method 1 (H2S [hydrogen sulfide] and SO2 [sulfur dioxide]) Designed according to: IEC 60721-3-3, unit in operation, class 3C2 IEC 60721-3-3, unit in operation, class 3S2
	Altitude	100% load capacity (no derating) up to 3280 ft (1000 m); 1% derating for each 328 ft (100 m) above 3280 ft (1000 m); max. 9842 ft (3000 m) (2000 m for corner grounded earth main systems) For 575V product, maximum altitude is 6561 ft (2000 m) regardless of main system

PowerXL series—DG1 technical data and specifications

Attribute	Description	Specification
Ambient conditions, continued	Vibration: • EN 61800-5-1 • EN 60668-2-6	5–150 Hz Displacement amplitude: 1 mm (peak) at 5 Hz to 15.8 Hz (FR1–FR6) Maximum acceleration amplitude: 1g at 15.8 Hz to 150 Hz (FR1–FR6)
	Shock: • ISTA 1 A • EN 60068-2-27	Storage and shipping: maximum 15 g, 11 ms (in package)
	Overvoltage	Overvoltage Category III
	Pollution degree	Pollution Degree 2
	Enclosure class	IP21/Type 1 standard in entire kW/hp range IP54/Type 12 option Note: Keypad or keypad hole plug required to be mounted in drive for IP54/Type 12 rating
	Immunity	Fulfills EN 61800-3 (2004), first and second environment
	MTBF	FR1: 165,457 hours FR2: 134,833 hours FR3: 102,515 hours FR4: 121,567 hours FR5: 108,189 hours FR6: Available in 2016
	Noise	FR1: 51.2 dB FR2: 58.6 dB FR3: 61.0 dB FR4: 68.0 dB FR5: 69.1 dB FR6: Available in 2016
Standards	Safety	UL 508C, CSA C22.2 No. 274-13 and EN 61800-5-1
	EMC	+EMC2: EN 61800-3 (2004), Category C2 The drive can be modified for IT networks and corner grounding TN system
	Electrostatic discharge	Second environment, IEC 61000-4-2, 4 kV CD or 8 kV AD, Criterion B
	Fast transient burst	Second environment, IEC 61000-4-4, 2 kV/5 kHz, Criterion B
	Dielectrical strength	Primary to secondary: 3600 Vac/5100 Vdc Primary to earth: 2000 Vac/2828 Vdc
	Approvals	EAC, RCM (C-Tick), RoHS, CE, UL and cUL (see nameplate for more detailed approvals)
Fieldbus connections		Onboard: EtherNet/IP, Modbus® TCP, Modbus RTU, BACnet
Safety/protections	Overvoltage protection Overvoltage trip limit	Yes 230 V drives: 456 V 480 V drives: 911 V 575 V drives: 1100 V
	Undervoltage protection	Yes
	Undervoltage trip limit	230 V drives: 211 V 480 V drives: 370 V 575 V drives: 550 V
	Earth fault protection	Yes Default: 15% motor FLA, Minimum: 0% motor FLA, Maximum: 30% motor FLA
	Input phase supervision	Yes
	Motor phase supervision	Yes
	Overcurrent protection	Yes
	Unit overtemperature protection	Yes
	Motor overload protection	Yes
	Motor stall protection	Yes
	Motor underload protection	Yes
	DC bus overvoltage control	Yes
	Short-circuit protection of 24 V reference voltages	Yes
	Surge protection	Yes (differential mode 2 kV; common mode 4 kV 230 V drives: 275 Vac, 10,000 A 480 V drives: 320 Vac, 8000 A 575 V drives: 385 Vac, 10,000 A
	Common coated boards	Yes (prevents corrosion)
Efficiency	Drive efficiency ratings	480 V: FR1 = 97.7% 480 V: FR2 = 97.9% 480 V: FR3 = 97.7% 480 V: FR4 = 98.0% 480 V: FR5 = 98.2% 230 V: FR1 = 96.7% 230 V: FR2 = 97.4% 230 V: FR3 = 97.2% 230 V: FR4 = 97.4% 230 V: FR5 = 97.7%

PowerXL Series-DG1

Wiring diagram

PowerXL series—DG1 control wiring diagram

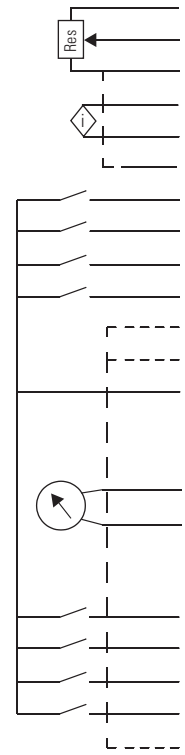

External wiring	Pin	Signal name	Signal	Default setting	Description
	1	+10 V	Ref. Output Voltage	-	10 Vdc Supply Source
	2	AI1+	Analog Input 1	0–10 V	Voltage Speed Reference (Programmable to 4 mA to 20 mA)
	3	AI1–	Analog Input 1 Ground	-	Analog Input 1 Common (Ground)
	4	AI2+	Analog Input 2	4 mA to 20 mA	Current Speed Reference (Programmable to 0–10 V)
	5	AI2–	Analog Input 2 Ground	-	Analog Input 2 Common (Ground)
	6	GND	I/O Signal Ground	-	I/O Ground for Reference and Control
	7	DIN5	Digital Input 5	Preset Speed B0	Sets frequency output to Preset Speed 1
	8	DIN6	Digital Input 6	Preset Speed B1	Sets frequency output to Preset Speed 2
	9	DIN7	Digital Input 7	Emergency Stop (TI–)	Input forces VFD output to shut off
	10	DIN8	Digital Input 8	Force Remote (TI+)	Input takes VFD from Local to Remote
	11	CMB	DI5 to DI8 Common	Grounded	Allows source input
	12	GND	I/O Signal Ground	-	I/O Ground for Reference and Control
	13	24 V	+24 Vdc Output	-	Control voltage output (100 mA max.)
	14	DO1	Digital Output 1	Ready	Shows the drive is ready to run
	15	24 Vo	+24 Vdc Output	-	Control voltage output (100 mA max.)
	16	GND	I/O Signal Ground	-	I/O Ground for Reference and Control
	17	AO1+	Analog Output 1	Output Frequency	Shows Output frequency to motor 0–60 Hz (4 mA to 20 mA)
	18	AO2+	Analog Output 2	Motor Current	Shows Motor current of motor 0–FLA (4 mA to 20 mA)
	19	24 Vi	+24 Vdc Input	-	External control voltage input
	20	DIN1	Digital Input 1	Run Forward	Input starts drive in forward direction (start enable)
	21	DIN2	Digital Input 2	Run Reverse	Input starts drive in reverse direction (start enable)
	22	DIN3	Digital Input 3	External Fault	Input causes drive to fault
	23	DIN4	Digital Input 4	Fault Reset	Input resets active faults
	24	CMA	DI1 to DI4 Common	Grounded	Allows source input
	25	A	RS-485 Signal A	-	Fieldbus Communication (Modbus, BACnet)
	26	B	RS-485 Signal B	-	Fieldbus Communication (Modbus, BACnet)
	27	R3NO	Relay 3 Normally Open	At Speed	Relay output 3 shows VFD is at Ref. Frequency
	28	R1NC	Relay 1 Normally Closed	Run	Relay output 1 shows VFD is in a run state
	29	R1CM	Relay 1 Common		
	30	R1NO	Relay 1 Normally Open		
	31	R3CM	Relay 3 Common	At Speed	Relay output 3 shows VFD is at Ref. Frequency
	32	R2NC	Relay 2 Normally Closed	Fault	Relay output 2 shows VFD is in a fault state
	33	R2CM	Relay 2 Common		
	34	R2NO	Relay 2 Normally Open		

Notes

The above wiring demonstrates a SINK configuration. It is important that CMA and CMB are wired to ground (as shown by dashed line).

If a SOURCE configuration is desired, wire 24 V to CMA and CMB and close the inputs to ground.

When using the +10 V for AI1, it is important to wire AI1– to ground (as shown by dashed line).

If using +10 V for AI1 or AI2, terminals 3, 5 and 6 need to be jumpered together.

PowerXL Series-DG1

Control board layout

PowerXL series—DG1 control board layout

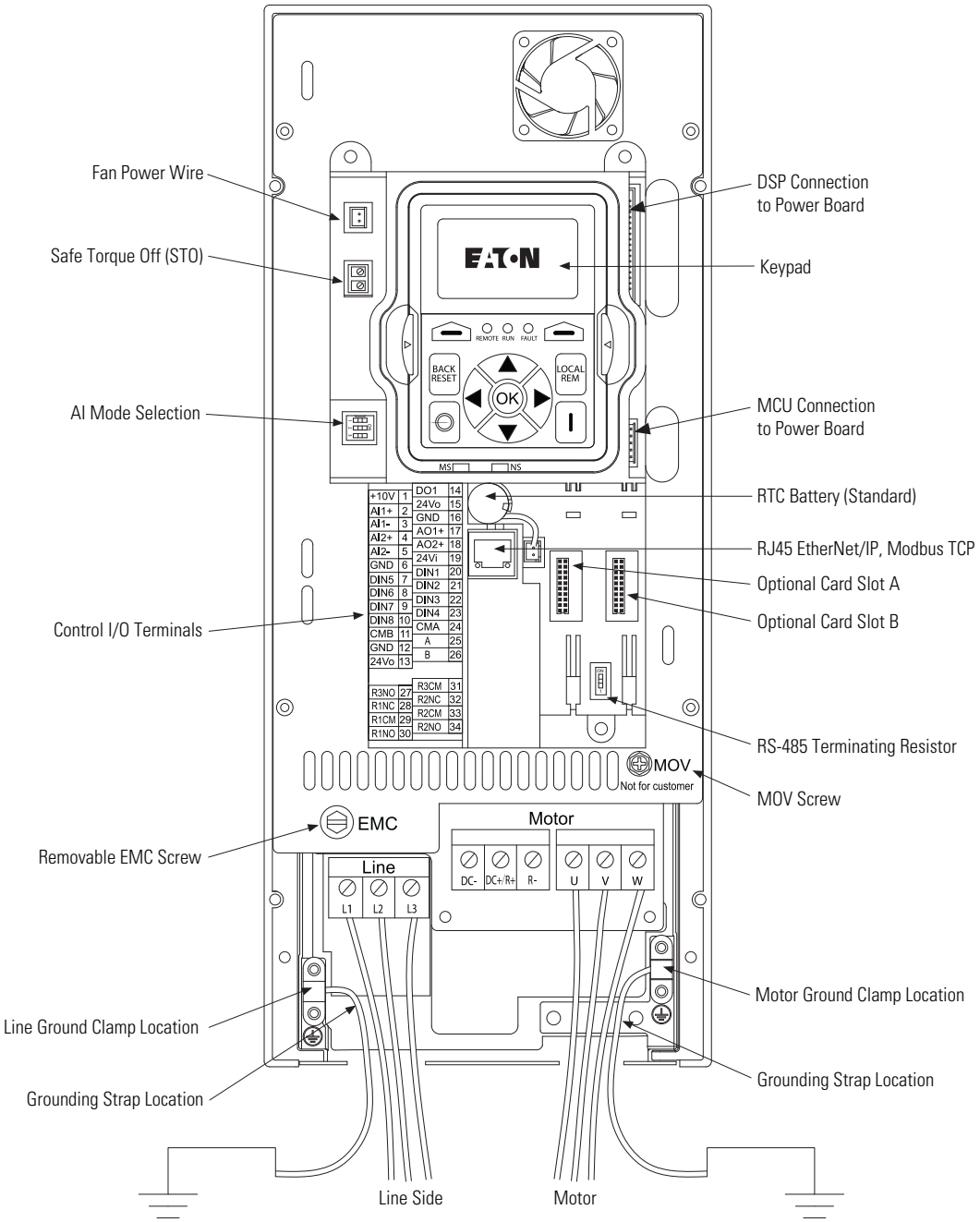

PowerXL Series-DG1

Dimensions

PowerXL series—DG1 dimensions

Approximate dimensions in Inches (mm)

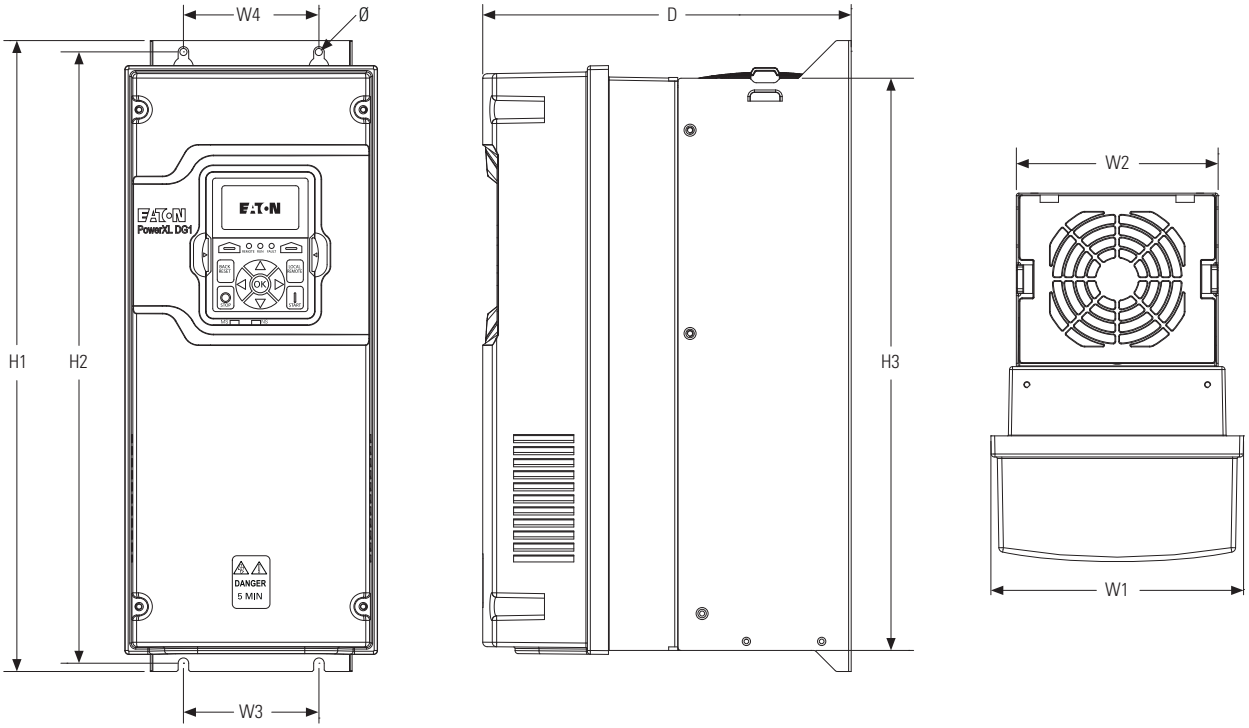

Frame size	Voltage	hp (CT/I_H)	kw	Amperes (CT/I_H)	Approximate dimensions in inches (mm) D	H1	H2	H3	W1	W2	W3	W4	Ø	Weight Lb (kg)
FR2	230 Vac	5-7.5	3-5.5	12.5-25	9.63	16.50	15.98	14.96	6.61	5.28	3.54	3.54	0.28	23.37
	480 Vac	7.5-15	5.5-11	12-23	(244.7)	(419.1)	(405.9)	(380.0)	(167.8)	(134.1)	(90.0)	(90.0)	(7.0)	(10.6)
	575 Vac ①	7.5-15	5.5-11	10-18										
FR3	230 Vac	10-15	7.5-11	31-48	10.44	21.97	21.46	20.41	8.06	7.24	4.92	4.92	0.35	49.82
	480 Vac	20-30	15-22	31-46	(265.1)	(558.0)	(545.0)	(518.5)	(204.6)	(183.9)	(125.0)	(125.0)	(9.0)	(22.6)
	575 Vac ①	20-30	15-22	22-34										
FR4	230 Vac	20-30	15-22	61-88	11.57	24.80	24.31	23.27	9.36	9.13	8.07	8.07	0.35	77.60
	480 Vac	40-60	30-45	61-87	(294.0)	(629.9)	(617.5)	(591.1)	(237.7)	(231.9)	(205.0)	(205.0)	(9.0)	(35.2)
	575 Vac ①	40-60	30-45	41-62										
FR5	230 Vac	40-60	30-45	114-170	13.41	34.98	29.65	27.83	11.34	11.10	8.66	8.66	0.35	154.32
	480 Vac	75-125	55-90	105-170	(340.7)	(888.5)	(753.1)	(706.9)	(288.0)	(281.9)	(220.0)	(220.0)	(9.0)	(70.0)
	575 Vac ①	75-125	55-90	80-125										
FR6②	230 Vac	75-100	55-75	211-261										
	480 Vac	150-200	110-150	205-261										
	575 Vac ①	150-200	110-160	144-208										

Note:

① 575 V available in May 2015

② FR6 available in 2016

Eaton
Hydraulics Group USA
14615 Lone Oak Road
Eden Prairie, MN 55344
USA
Tel: 952-937-9800
Fax: 952-294-7722
www.eaton.com/hydraulics

Eaton
Hydraulics Group Europe
Route de la Longeraie 7
1110 Morges
Switzerland
Tel: +41 (0) 21 811 4600
Fax: +41 (0) 21 811 4601

Eaton
Hydraulics Group Asia Pacific
Eaton Building
No.7 Lane 280 Linhong Road
Changning District,
Shanghai 200335
China
Tel: (+86 21) 5200 0099
Fax: (+86 21) 2230 7240

Powering Business Worldwide

Document No. E-PUIO-CC002-E
April 2015